KDIC SERIES

AIR-HANDLER AIR CONDITIONER

EN

Installation Manual

KLIMAIRE®

IMPORTANT NOTE:

Read this manual carefully before installing or operating your new air conditioning unit. Make sure to save this manual for future reference.

CONTENTS

SAFETY PRECAUTIONS 02
ACCESSORIES 14
INDOOR UNIT INSTALLATION 15
REFRIGERANT PIPING CONNECTION 25
INSTALLATION OF ELECTRIC AUXILIARY HEAT MODULE 29
CONFIRMATION OF INDOOR UNIT 31
OUTDOOR UNIT INSTALLATION 33
WIRING PRECAUTIONS 37
SPECIFICATIONS 48
AIR EVACUATION 50
NOTE ON ADDING REFRIGERANT 51
TEST RUN 52

Read this manual

Inside you'll find many helpful hints on how to use and maintain your air conditioner properly. Just a little preventive care on your part can save you a great deal of time and money over the life of your air conditioner. These instructions may not cover every possible condition of use, so common sense and attention to safety is required when installing, operating and maintaining this product.

SAFETY PRECAUTIONS

It is really important you read Safety Precautions Before Operation and Installation Incorrect installation due to ignoring instructions can cause serious damage or injury. The seriousness of potential damage or injuries is classified as either a WARNING or CAUTION.

Explanation of Symbols

WARNING

This symbol indicates the possibility of personal injury or loss of life.

CAUTION

This symbol indicates the possibility of property damage or serious consequences.

⚠ ELECTRICAL WARNINGS

- Only use the specified wire. If the wire is damaged, it must be replaced by the manufacturer, its service agent or similarly qualified persons in order to avoid a hazard.
- The product must be properly grounded at the time of installation, or electric shock may occur.
- For all electrical work, follow all local and national wiring standards, regulations, and the Installation Manual. Connect cables tightly, and clamp them securely to prevent external forces from damaging the terminal. Improper electrical connections can overheat and cause fire, and may also cause shock. All electrical connections must be made according to the Electrical Connection Diagram located on the panels of the indoor and outdoor units.
- All wiring must be properly arranged to ensure that the control board cover can close properly. If the control board cover is not closed properly, it can lead to corrosion and cause the connection points on the terminal to heat up, catch fire, or cause electrical shock.
- Disconnection must be incorporated in the fixed wiring in accordance with the NEC, CEC or local codes.
- Do not share the electrical outlet with other appliances. Unit must be installed on dedicated electrical circuit.

⚠ WARNINGS FOR PRODUCT INSTALLATION

- Turn off the air conditioner and disconnect the power before performing any installation or repairs. Failure to do so can cause electric shock.
- Installation must be performed by an authorized dealer or specialist according to the installation instructions. Improper installation can cause water damage, electrical hazard or fire. Contact an authorized service technician for repair or maintenance.
- This appliance shall be installed in accordance with national wiring regulations. Only use the included accessories, parts, and specified parts for installation.
- Using non-standard parts can cause water leakage, electrical shock, fire, and can cause the unit to fail.
- Install the unit in a firm location that can support the unit's weight. If the chosen location cannot support the unit's weight, or the installation is not done properly, the unit may drop and cause serious injury and damage.
- Install drainage piping according to the instructions in this manual. Improper drainage may cause water damage to your home and property.
- For units that have an auxiliary electric heater, do not install the unit within 1 meter (3 feet) of any combustible materials.
- For the units that have a wireless network function, the USB device access, replacement, maintenance operations must be carried out by professional staff.
- Do not install the unit in a location that may be exposed to combustible gas leaks. If combustible gas accumulates around the unit, it may cause fire.
- Do not turn on the power until all work has been completed.
- When moving or relocating the air conditioner, consult experienced service technicians for disconnection and reinstallation of the unit.
- How to install the appliance to its support, please read the information for details in "indoor unit installation" and "outdoor unit installation" sections.

TAKE NOTE OF FUSE SPECIFICATIONS

The air conditioner's circuit board (PCB) is designed with a fuse to provide overcurrent protection. The specifications of the fuse are printed on the circuit board, for example: T3.15AL/250VAC, T5AL/250VAC, T3.15A/250VAC, T5A/250VAC, T20A/250VAC, T30A/250VAC, etc.
NOTE: Only the blast-proof ceramic fuse can be used.

⚠ WARNINGS FOR CLEANING AND MAINTENANCE

- Turn off the device and disconnect the power before cleaning. Failure to do so can cause electrical shock.
- **Do not** clean the air conditioner with excessive amounts of water.
- **Do not** clean the air conditioner with combustible cleaning agents. Combustible cleaning agents can cause fire or deformation.

⚠ WARNING FOR USING FLAMMABLE REFRIGERANT

1. Installation (Space)
   - That the installation of pipe-work shall be kept to a minimum.
   - That pipe-work shall be protected from physical damage.
   - Where refrigerant pipes shall be compliance with national gas regulations.
   - That mechanical connections shall be accessible for maintenance purposes.
   - In cases that require mechanical ventilation, ventilation openings shall be kept clear of obstruction.
   - When disposing of the product is used, be based on national regulations, properly processed.

2. Servicing
   - Any person who is involved with working on or breaking into a refrigerant circuit should hold a current valid certificate from an industry-accredited assessment authority, which authorises their competence to handle refrigerants safely in accordance with an industry recognized assessment specification.
3. Maintenance and repair requiring the assistance of other skilled personnel shall be carried out under the supervision of the person competent in the use of flammable refrigerants.
4. Do not use any means to accelerate the defrosting process or to clean, other than those recommended by the manufacturer.
5. The appliance shall be stored in a room without continuously operating ignition sources (for example: open flames, an operating gas appliance or an operating electric heater).
6. Be more careful that foreign matter(oil, water, etc.) does not enter the piping. Also, when storing the piping, securely seal the opening by pinching, taping, etc.
7. Do not pierce or burn.
8. Be aware that refrigerants may not contain an odour.
9. All working procedure that affects safety means shall only be carried by competent persons.
10. Appliance shall be stored in a well-ventilated area where the room size corresponds to the room area as specifiec for operation.
11. The appliance shall be stored so as to prevent mechanical damage from occurring.
12. Joints shall be tested with detection equipment with a capability of 5 g/year of refrigerant or better, with the equipment in standstill and under operation or under a pressure of at least these standstill or operation conditions after installation. Detachable joints shall NOT be used in the indoor side of the unit (brazed, welded joint could be used).

NOTE ABOUT FUSE SPECIFICATIONS

- The air conditioner's circuit board (PCB) may be designed with a fuse to provide overcurrent protection. This fuse must be replaces with identical component.
- The specifications of the fuse, if equipped, are printed on the circuit board, examples of such are T5A/250VAC and T10A/250VAC.

NOTE ABOUT FLUORINATED GASSES (NOT APPLICABLE TO THE UNIT USING R290 REFRIGERANT)

- This air-conditioning unit contains fluorinated greenhouse gasses. For specific information on the type of gas and the amount, please refer to the relevant label on the unit itself or the "Owner's Manual - Product Fiche" in the packaging of the outdoor unit. (European Union products only).
- Installation, service, maintenance and repair of this unit must be performed by a certified technician.
- Product uninstallation and recycling must be performed by a certified technician.
- When the unit is checked for leaks, proper record-keeping of all checks is strongly recommended.

The allowed static pressure range of the air conditioner on site is 0-0.80 in.wc.(0-200 Pa). The data below represents the static pressures at full required air flow used for AHRI testing.

MODEL	18-24K	30-36K	48-60K
PRESSURE (After January 1, 2023)	0.5 in.wc. (125Pa)	0.5 in.wc. (125Pa)	0.5 in.wc. (125Pa)

NOTE

The maximum functional total external static pressure can not exceed 0.80 in.wc. or 200 Pa. The airflow reduces significantly beyond 0.80 in.wc. or 200Pa. System design should allow for the increased resistance of filters as they become dirty.

For R454B refrigerant charge amount and minimum room area:

The machine you purchased may be one of the types in the table below. The indoor and outdoor units are designed to be used together, and the indoor unit is connected via an air duct system to one or more room. Please check the machine you purchased . The height of the room cannot be less than 7.3ft/2.2m, and the minimum room area of operating or storage should be as specified in the following table:

Products series	Model	Indoor unit	Outdoor unit
Current Loop	18K(208/230V)	KDIC18-H2-4	KSIE018-H220-O-4 KSIH018-H225-O-4
	24K(208/230V)	KDIC24-H2-4	KSIE024-H220-O-4 KSIH024-H225-O-4
	30K(208/230V)	KDIC30-H2-4	KSIV030-H219-O-4
	36K(208/230V)	KDIC36-H2-4	KSIV036-H219-O-4
RS485	36K(208/230V)	KDIC37-H2-4	KSIH036-H218-4 KSIR036-H218-4
	48K(208/230V)	KDIC48-H2-4	KSIH048-H218-4 KSIR048-H218-4
	60K(208/230V)	KDIC60-H2-4	KSIH060-H218-4 KSIR060-H218-4

M_c or M_{REL} [oz/kg]	TA_{min} [ft²/m²]	M_c or M_{REL} [oz/kg]	TA_{min} [ft²/m²]	M_c or M_{REL} [oz/kg]	TA_{min} [ft²/m²]	M_c or M_{REL} [oz/kg]	TA_{min} [ft²/m²]
<=62.7/1.776	12/1.1	134/3.8	126/11.67	211.6/6.0	198/18.43	289.2/8.2	271/25.18
63.5/1.8	60/5.53	141.1/4	132/12.29	218.7/6.2	205/19.04	296.3/8.4	278/25.8
70.5/2	66/6.14	148.1/4.2	139/12.9	225.8/6.4	212/19.66	303.4/8.6	284/26.41
77.6/2.2	73/6.76	155.2/4.4	145/13.51	232.8/6.6	218/20.27	310.4/8.8	291/27.63
84.6/2.4	79/7.37	162.2/4.6	152/14.13	239.9/6.8	225/20.88	317.5/9.0	298/27.64
91.7/2.6	86/7.99	169.3/4.8	159/14.74	246.9/7.0	231/21.5	324.5/9.2	304/28.26
98.8/2.8	93/8.6	176.4/5	165/15.36	254/7.2	238/22.11	331.6/9.4	311/28.87
105.8/3	99/9.21	183.4/5.2	172/15.97	261/7.4	245/22.73	338.6/9.6	317/29.48
112.9/3.2	106/9.83	190.5/5.4	179/16.58	268.1/7.6	251/23.34	345.7/9.8	324/30.10
119.9/3.4	112/10.44	197.5/5.6	185/17.2	275.1/7.8	258/23.96	352.7/10.0	331/30.71
127/3.6	119/11.06	204.6/5.8	192/17.81	282.2/8.0	264/24.57		
Area formula	**TA_{min}** is the required minimum area of the total conditioned space connected by air ducts in ft²/m². **M_c** is the actual refrigerant charge in the system in oz/kg **M_{REL}** is the refrigerant releasable charge in oz/kg **h_{inst}** is the height of the bottom of the appliance relative to the floor of the room after installation. **WARNING:** The minimum room area or minimum room area of conditioned space is based on releasable charge and total system refrigerant charge. TAmin shall refer to the table above for a larger refrigerant charge size than actual charge, if releasable charge and total the system refrigerant charge is not equal to any of the size in the table above.						

When the unit detects a refrigerant leak, the minimum airflow of the indoor unit is as follows:

Model	18K	24K	30K	36K	48K	60K
Nominal air volume	400CFM (680m³/h)	400CFM (680m³/h)	447CFM (760m³/h)	541CFM (920m³/h)	706CFM (1200m³/h)	795CFM (1350m³/h)

1. **Installation** (where refrigerant pipes are allowed)
   - Any person who is involved with working on or breaking into a refrigerant circuit should hold a current valid certificate from an industry-accredited assessment authority, which authorizes their competence to handle refrigerants safely in accordance with an industry recognized assessment specification.
   - Maintenance and repair requiring the assistance of other skilled personnel shall be carried out under the supervision of the person competent in the use of flammable refrigerants.
   - That the installation of pipe-work shall be kept to a minimum.
   - That pipe-work shall be protected from physical damage.
   - Where refrigerant pipes shall be compliance with national gas regulations.
   - That mechanical connections shall be accessible for maintenance purposes.
   - Be more careful that foreign matter (oil, water, etc.) does not enter the piping. Also, when storing the piping, securely seal the opening by pinching, taping, etc.
   - All working procedure that affects safety means shall only be carried by competent persons.
   - Appliance shall be stored in a well-ventilated area where the room size corresponds to the room area as specified for operation.
   - Joints shall be tested with detection equipment with a capability of 5 g/year of refrigerant or better, with the equipment in standstill and under operation or under a pressure of at least these standstill or operation conditions after installation. Detachable joints shall NOT be used in the indoor side of the unit (brazed, welded joint could be used).
   - In cases that require mechanical ventilation, ventilation openings shall be kept clear of obstruction.
   - LEAK DETECTION SYSTEM installed. Unit must be powered except for service. For the unit with refrigerant sensor, when the refrigerant sensor detects refrigerant leakage, the indoor unit will display an error code and emit a buzzing sound, the compressor of outdoor unit will immediately stop, and the indoor fan will start running. The service life of the refrigerant sensor is 15 years. When the refrigerant sensor malfunctions, the indoor unit will display the error code “FHCC”. The refrigerant sensor cannot be repaired and can only be replaced by the manufacturer. It shall only be replaced with the sensor specified by the manufacturer.

2. **When a FLAMMABLE REFRIGERANT is used,** the requirements for installation space of appliance and/or ventilation requirements are determined according to
   - the mass charge amount(M) used in the appliance,
   - the installation location,
   - the type of ventilation of the location or of the appliance.
   - piping material, pipe routing, and installation shall include protection from physical damage in operation and service, and be in compliance with national and local codes and standards, such as ASHRAE 15, IAPMO Uniform Mechanical Code, ICC International Mechanical Code, or CSA B52. All field joints shall be accessible for inspection prior to being covered or enclosed.
   - that protection devices, piping, and fittings shall be protected as far as possible against adverse environmental effects, for example, the danger of water collecting and freezing in relief pipes or the accumulation of dirt and debris;
   - that piping in refrigeration systems shall be so designed and installed to minimize the likelihood of hydraulic shock damaging the system;
   - that steel pipes and components shall be protected against corrosion with a rustproof coating before applying any insulation;
   - that precautions shall be taken to avoid excessive vibration or pulsation;
   - the minimum floor area of the room shall be mentioned in the form of a table or a single figure without reference to a formula;
   - after completion of field piping for split systems, the field pipework shall be pressure tested with an inert gas and then vacuum tested prior to refrigerant charging, according to the following requirements:

a. The minimum test pressure for the low side of the system shall be the low side design pressure and the minimum test pressure for the high side of the system shall be the high side design pressure, unless the high side of the system can not be isolated from the low side of the system in which case the entire system shall be pressure tested to the low side design pressure.
b. The test pressure after removal of pressure source shall be maintained for at least 1 h with no decrease of pressure indicated by the test gauge, with test gauge resolution not exceeding 5% of the test pressure.
c. During the evacuation test, after achieving a vacuum level specified in the manual or less, the refrigeration system shall be isolated from the vacuum pump and the pressure shall not rise above 1500 microns within 10 min. The vacuum pressure level shall be specified in the manual, and shall be the lessor of 500 microns or the value required for compliance with national and local codes and standards, which may vary between residential, commercial, and industrial buildings.
- field-made refrigerant joints indoors shall be tightness tested according to the following requirements: The test method shall have a sensitivity of 5 grams per year of refrigerant or better under a pressure of at least 0.25 times the maximum allowable pressure. No leak shall be detected.

3 . Qualification of workers

Any maintenance, service and repair operations must be required qualification of the working personnel. Every working procedure that affects safety means shall only be carried out by competent persons that joined the training and achieved competence should be documented by a certificate. The training of these procedures is carried out by national training organizations or manufacturers that are accredited to teach the relevant national competency standards that may be set in legislation. All training shall follow the ANNEX HH requirements of UL 60335-2-40 4th Edition.

Examples for such working procedures are:

• breaking into the refrigerating circuit;
• opening of sealed components;
• opening of ventilated enclosures.

4. Checks to the area

Prior to beginning work on systems containing flammable refrigerants, safety checks are necessary to ensure that the risk of ignition is minimised. For repair to the refrigerating system, the following precautions shall be complied with prior to conducting work on the system.

5. Work procedure

Works shall be undertaken under a controlled procedure so as to minimise the risk of a flammable gas or vapour being present while the work is being performed.

6. General work area

All maintenance staff and others working in the local area shall be instructed on the nature of work being carried out. work in confined spaces shall be avoided.

7. Checking for presence of refrigerant

The area shall be checked with an appropriate refrigerant detector prior to and during work, to ensure the technician is aware of potentially flammable atmospheres. Ensure that the leak detection equipment being used is suitable for use with flammable refrigerants, i.e., no sparking, adequately sealed or intrinsically safe.

8. Presence of fire extinguisher

If any hot work is to be conducted on the refrigeration equipment or any associated parts, appropriate fire extinguishing equipment shall be available to hand. Have a dry power or CO_2 fire extinguisher adjacent to the charging area.

9. No ignition sources
No person carrying out work in relation to a REFRIGERATING SYSTEM which involves exposing any pipe work shall use any sources of ignition in such a manner that it may lead to the risk of fire or explosion. All possible ignition sources, including cigarette smoking, should be kept sufficiently far away from the site of installation, repairing, removing and disposal, during which refrigerant can possibly be released to the surrounding space. Prior to work taking place, the area around the equipment is to be surveyed to make sure that there are no flammable hazards or ignition risks. “No Smoking” signs shall be displayed.

10. Ventilated area
Ensure that the area is in the open or that it is adequately ventilated before breaking into the system or conducting any hot work. A degree of ventilation shall continue during the period that the work is carried out. The ventilation should safely disperse any released refrigerant and preferably expel it externally into the atmosphere.

11. Checks to the refrigeration equipment
Where electrical components are being changed, they shall be fit for the purpose and to the correct specification. At all times the manufacturer’s maintenance and service guidelines shall be followed. If in doubt consult the manufacturer’s technical department for assistance. The following checks shall be applied to installations using FLAMMABLE REFRIGERANTS:

- the actual refrigerant charge is in accordance with the room size within which the refrigerant containing parts are installed;
- the ventilation machinery and outlets are operating adequately and are not obstructed;
- if an indirect refrigerating circuit is being used, the secondary circuits shall be checked for the presence of refrigerant;
- marking to the equipment continues to be visible and legible, marking and signs that are illegible shall be corrected;
- refrigeration pipe or components are installed in a position where they are unlikely to be exposed to any substance which may corrode refrigerant containing components, unless the components are constructed of materials which are inherently resistant to being corroded or are suitably protected against being so corroded.

12. Checks to electrical devices
Repair and maintenance to electrical components shall include initial safety checks and component inspection procedures. If a fault exists that could compromise safety, then no electrical supply shall be connected to the circuit until it is satisfactorily dealt with. If the fault cannot be corrected immediately but it is necessary to continue operation, and adequate temporary solution shall be used. This shall be reported to the owner of the equipment so all parties are advised.
Initial safety checks shall include:
that capacitors are discharged: this shall be done in a safe manner to avoid possibility of sparking;
that there no live electrical components and wiring are exposed while charging, recovering or purging the system;
that there is continuity of earth bonding;
Sealed electrical components shall be replaced if it's damage;
Intrinsically safe components must be replaced if it's damage.

13. Wiring
Check that wiring will not be subject to wear, corrosion, excessive pressure, vibration, sharp edges or any other adverse environmental effects. The check shall also take into account the effects of aging or continual vibration from sources such as compressors or fans.

14. Detection of flammable refrigerants

Under no circumstances shall potential sources of ignition be used in the searching for or detection of refrigerant leaks. A halide torch (or any other detector using a naked flame) shall not be used.

The following leak detection methods are deemed acceptable for refrigerant systems. Electronic leak detectors may be used to detect refrigerant leaks but, in the case of FLAMMABLE REFRIGERANTS, the sensitivity may not be adequate, or may need re-calibration. (Detection equipment shall be calibrated in a refrigerant-free area.) Ensure that the detector is not a potential source of ignition and is suitable for the refrigerant used. Leak detection equipment shall be set at a percentage of the LFL of the refrigerant and shall be calibrated to the refrigerant employed, and the appropriate percentage of gas (25% maximum) is confirmed. Leak detection fluids are also suitable for use with most refrigerants but the use of detergents containing chlorine shall be avoided as the chlorine may react with the refrigerant and corrode the copper pipe-work.

NOTE Examples of leak detection fluids are

- bubble method.

If a leak is suspected, all naked flames shall be removed/extinguished.

If a leakage of refrigerant is found which requires brazing, all of the refrigerant shall be recovered from the system, or isolated (by means of shut off valves) in a part of the system remote from the leak. See the following instructions of removal of refrigerant.

15. Removal and evacuation

When breaking into the refrigerant circuit to make repairs - or for any other purpose conventional procedures shall be used. However, for flammable refrigerants it is important that best practice be followed, since flammability is a consideration.

The following procedure shall be adhered to:

- safely remove refrigerant following local and national regulations;
- evacuate;
- purge the circuit with inert gas (optional for A2L);
- evacuate (optional for A2L);
- continuously flush or purge with inert gas when using flame to open circuit; and
- open the circuit.

The refrigerant charge shall be recovered into the correct recovery cylinders if venting is not allowed by local and national codes. For appliances containing flammable refrigerants, the system shall be purged with oxygen-free nitrogen to render the appliance safe for flammable refrigerants. This process might need to be repeated several times. Compressed air or oxygen shall not be used for purging refrigerant systems.

For appliances containing flammable refrigerants, refrigerants purging shall be achieved by breaking the vacuum in the system with oxygen-free nitrogen and continuing to fill until the working pressure is achieved, then venting to atmosphere, and finally pulling down to a vacuum (optional for A2L). This process shall be repeated until no refrigerant is within the system (optional for A2L). When the final oxygen-free nitrogen charge is used, the system shall be vented down to atmospheric pressure to enable work to take place.

The outlet for the vacuum pump shall not be close to any potential ignition sources, and ventilation shall be available.

16. Charging procedures

In addition to conventional charging procedures, the following requirements shall be followed:

Works shall be undertaken with appropriate tools only (In case of uncertainty, please consult the manufacturer of the tools for use with flammable refrigerants)
Ensure that contamination of different refrigerants does not occur when using charging equipment. Hoses or lines shall be as short as possible to minimize the amount of refrigerant contained in them.
Cylinders shall be kept upright.
Ensure that the refrigeration system is earthed prior to charging the system with refrigerant.
Label the system when charging is complete (if not already).
Extreme care shall be taken not to overfill the refrigeration system.
Prior to recharging the system, it shall be pressure tested with oxygen free nitrogen (OFN). The system shall be leak tested on completion of charging but prior to commissioning. A follow up leak test shall be carried out prior to leaving the site.

17. Decommissioning

Before carrying out this procedure, it is essential that the technician is completely familiar with the equipment and all its detail. It is recommended good practice that all refrigerants are recovered safely. Prior to the task being carried out, an oil and refrigerant sample shall be taken in case analysis is required prior to re-use of recovered refrigerant. It is essential that electrical power is available before the task is commenced.

a) Become familiar with the equipment and its operation.
b) Isolate system electrically
c) Before attempting the procedure ensure that:

- mechanical handling equipment is available, if required, for handling refrigerant cylinders;
- all personal protective equipment is available and being used correctly;
- the recovery process is supervised at all times by a competent person;
- recovery equipment and cylinders conform to the appropriate standards.

d) Pump down refrigerant system, if possible.
e) If a vacuum is not possible, make a manifold so that refrigerant can be removed from various parts of the system.
f) Make sure that cylinder is situated on the scales before recovery takes place.
g) Start the recovery machine and operate in accordance with instructions.
h) Do not overfill cylinders (no more than 80 % volume liquid charge)
i) Do not exceed the maximum working pressure of the cylinder, even temporarily.
j) When the cylinders have been filled correctly and the process completed, make sure that the cylinders and the equipment are removed from site promptly and all isolation valves on the equipment are closed off.
k) Recovered refrigerant shall not be charged into another refrigeration system unless it has been cleaned and checked.

18. Labeling

Equipment shall be labelled stating that it has been de-commissioned and emptied of refrigerant. The label shall be dated and signed. For appliances containing FLAMMABLE REFRIGERANTS, ensure that there are labels on the equipment stating the equipment contains FLAMMABLE REFRIGERANT.

19. Recovery

When removing refrigerant from a system, either for servicing or decommissioning, it is recommended good practice that all refrigerants are removed safely.
When transferring refrigerant into cylinders, ensure that only appropriate refrigerant recovery cylinders are employed. Ensure that the correct number of cylinders for holding the total system charge is available. All cylinders to be used are designated for the recovered refrigerant and labelled for that refrigerant (i. e. special cylinders for the recovery of refrigerant). Cylinders shall be complete with pressure-relief valve and associated shut-off valves in good working order. Empty recovery cylinders are evacuated and, if possible, cooled before recovery occurs.
The recovery equipment shall be in good working order with a set of instructions concerning the equipment that is at hand and shall be suitable for the recovery of the flammable refrigerant. If in doubt, the manufacturer should be consulted. In addition, a set of calibrated weighing scales shall be available and in good working order. Hoses shall be complete with leak-free disconnect couplings and in good condition.
The recovered refrigerant shall be processed according to local legislation in the correct recovery cylinder, and the relevant waste transfer note arranged. Do not mix refrigerants in recovery units and especially not in cylinders.
If compressors or compressor oils are to be removed, ensure that they have been evacuated to an acceptable level to make certain that flammable refrigerant does not remain within the lubricant. The compressor body shall not be heated by an open flame or other ignition sources to accelerate this process. When oil is drained from a system, it shall be carried out safely.

20. Unventilated areas

- An unventilated area where the appliance using FLAMMABLE REFRIGERANTS is installed shall be so constructed that should any refrigerant leak, it will not stagnate so as to create a fire or explosion hazard.
- If appliances connected via an air duct system to one or more rooms with A2L REFRIGERANTS are installed in a room with an area less than Amin, that room shall be without continuously operating open flames (e.g. an operating gas appliance) or other POTENTIAL IGNITION SOURCES (for e.g. an operating electric heater, hot surfaces). A flame-producing device may be installed in the same space if the device is provided with an effective flame arrest.
- Auxiliary devices which may be a POTENTIAL IGNITION SOURCE shall not be installed in the duct work. Examples of such POTENTIAL IGNITION SOURCES are hot surfaces with a temperature exceeding 700 °C and electric switching devices.
- Only auxiliary devices (such as certificated heater kit) approved by the appliance manufacturer or declared suitable with the refrigerant shall be installed in connecting ductwork.
- For duct connected appliances, false ceilings or drop ceilings may be used as a return air plenum if a REFRIGERANT DETECTION SYSTEM is provided in the appliance and any external connections are also provided with a sensor immediately below the return air plenum duct joint.
- REFRIGERANT SENSORS for REFRIGERANT DETECTION SYSTEMS Shall Only be replaced with sensors specified by the appliance manufacture.
- LEAK DETECTION SYSTEM installed. Unit must be powered except for service.

21. Transportation, marking and storage for units that employ flammable refrigerants

a. General
The following information is provided for units that employ FLAMMABLE REFRIGERANTS.

b. Transport of equipment containing flammable refrigerants
Attention is drawn to the fact that additional transportation regulations may exist with respect to equipment containing flammable gas. The maximum number of pieces of equipment or the configuration of the equipment permitted to be transported together will be determined by the applicable transport regulations.

c. Marking of equipment using signs
Signs for similar appliances used in a work area are generally addressed by local regulations and give the minimum requirements for the provision of safety and/or health signs for a work location.
All required signs are to be maintained and employers should ensure that employees receive suitable and sufficient instruction and training on the meaning of appropriate safety signs and the actions that need to be taken in connection with these signs.
The effectiveness of signs should not be diminished by too many signs being placed together.
Any pictograms used should be as simple as possible and contain only essential details.

d. Disposal of equipment using flammable refrigerants
See national regulations.

e. Storage of equipment/appliances
The storage of the appliance should be in accordance with the applicable regulations or instructions, whichever is more stringent.

f. Storage of packed (unsold) equipment
Storage package protection should be constructed in such a way that mechanical damage to the equipment inside the package will not cause a leak of the REFRIGERANT CHARGE.
The maximum number of pieces of equipment permitted to be stored together will be determined by local regulations.

Explanation of symbols displayed on the indoor unit or outdoor unit

	WARNING	This symbol shows that this appliance used a flammable refrigerant. If the refrigerant is leaked and exposed to an external ignition source, there is a risk of fire.
	CAUTION	This symbol shows that the operation manual should be read carefully.
	CAUTION	This symbol shows that a service personnel should be handling this equipment with reference to the installation manual.
	CAUTION	
	CAUTION	This symbol shows that information is available such as the operating manual or installation manual.

ACCESSORIES

The air conditioning system comes with the following accessories. Use all of the installation parts and accessories to install the air conditioner. Improper installation may result in water leakage, electrical shock and fire, or equipment failure.

Accessories (Packed with the indoor unit)

Name	Picture	Quantity
Manual		2
Cable ties		6
Insulation sleeve	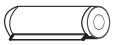	2
Flare nut		2
Braze to flare adapter		2
Remote controller		1
Battery		2
Wired remote controller	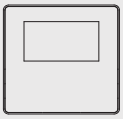	1

Accessories (Packed with the outdoor unit)

Name	Picture	Quantity
Drain joint	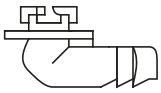	1
Seal ring (Not available for the outdoor unit with dimensions of 38-19/32in*38-3/8in*16-11/32(16-1/10)in)		1

NOTICE

The wired system control functions as an IR receiver for the handheld remote, if the remote is not used it must be retained with the indoor unit to adjust parameters, and for troubleshooting.

INDOOR UNIT INSTALLATION

⚠ CAUTION

Install the indoor and outdoor units, cables and wires at least 3-1/5ft (1m) from televisions or radios to prevent static or image distortion. Depending on the appliances, a 3-1/5ft (1m) distance may not be sufficient.

The Indoor unit must be electrically grounded per national and local electrical code.

Select the installation location of indoor units

WARNING
DO NOT LOCATIONS:

DO NOT install the indoor unit in a moist environment. Excessive moisture can corrode the equipment, electrical components, and cause electrical shorts.

Areas with strong electromagnetic waves.

Coastal areas with high salt content in the air.

Areas with oil drilling or fracking.

Areas that store flammable materials or gas.

Areas where there may be detergent or other corrosive gases in the air, such as bathrooms, or laundry rooms.

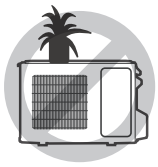

Areas where the air inlet and outlet may be obstructed.

Danger of explosion. Keep flammable materials and vapours, such as gasoline, away from air handler.

WARNING
MUST BE INSTALLED IN A LOCATION
THAT MEETS THE FOLLOWING REQUIREMENTS:

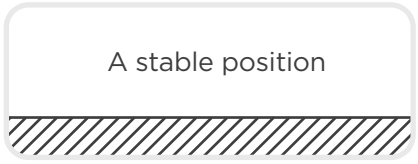

☑ Securely install the indoor unit on a structure that can support its weight. If the structure is too weak, the unit may fall and cause personal injury, unit and property damage, or death.

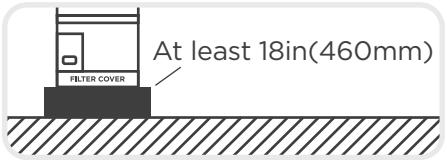

☑ Place air handler so that heating elements are at least 18in(460mm) above the floor for a garage installation. Failure to follow these instructions can result in death, explosion, or fire.

☑ Enough room for installation and maintenance.

☑ Enough room for the connecting pipe and drainpipe.

☑ The structure that the equipment is suspended from must support the weight of the indoor unit.

⚠ WARNING

There must be an airtight seal between the bottom of the air handler and the return air plenum. Use fiberglass sealing strips, foil duct tape, caulking, or equivalent sealing method between the plenum and the air handler cabinet to ensure a tight seal. Return air must not be drawn from a room where this air handler or any gas-fueled appliance (i.e., water heater), or carbon monoxide-producing device (i.e., wood fireplace) is installed.

Preparation and precautions for indoor unit installation

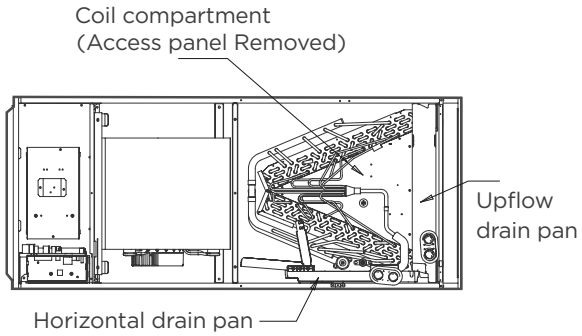

⚠ WARNING

- Please apply sealant around the places where the wires, refrigerant pipes and condensate pipes enter the cabinet.
- Use duct tape or flexible sealant to seal closed anyspace around the holes where the drain lines exit the cabinet. Warm air must not be allowed to enter throughany gaps or holes in the cabinet.

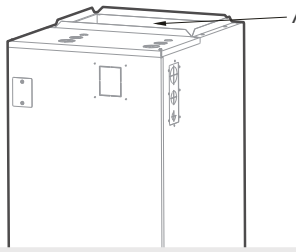

NOTICE

- Remove all accessories and packing in the air outlet before installation.

Recommended Distances Between the Indoor Unit

The distance between the mounted indoor unit should meet the specifications illustrated in the following diagram.

Horizontal installations

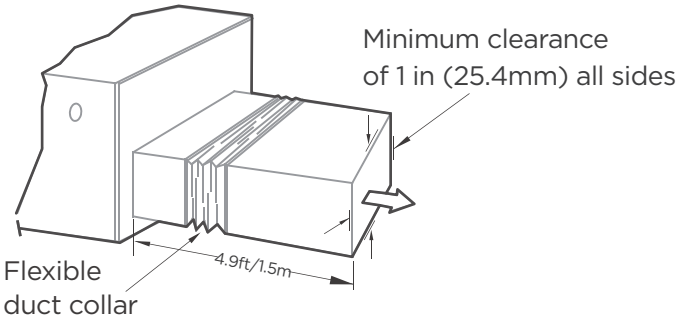

The outlet side pipe length 4.9ft/1.5m.

Vertical installations

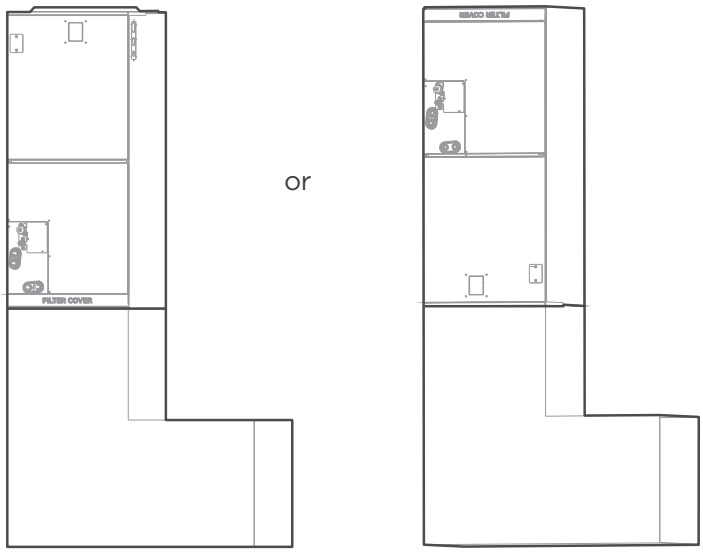

Fixing instructions: When installed vertically (upward or downward), the lower end of the air outlet needs to be connected to the L-shaped metal air duct and fastened by screws
If return air is to be ducted,install duct flush with floor. Set unit on floor over opening.All return air must pass through the coil.

Indoor unit parts installation size

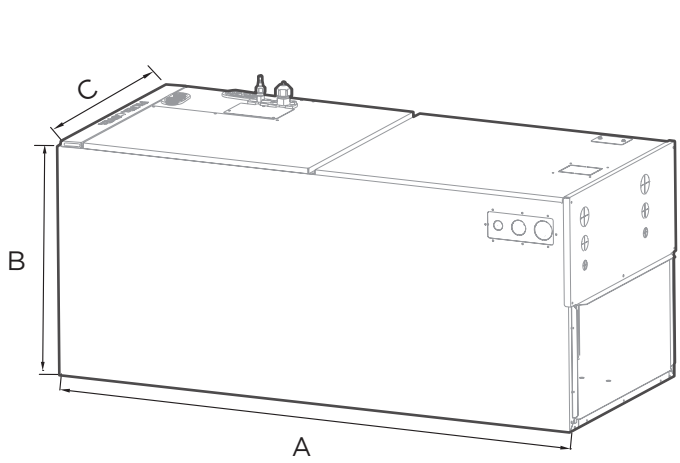

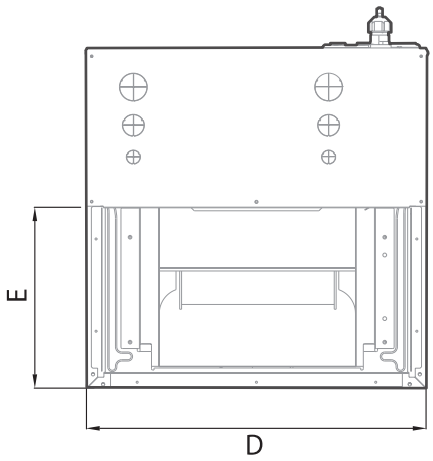

(unit: inch/mm)

Dimensions \ Model(Btu/h)		12K~24K	30K~36K	48K-60K
Length of A	inch	45	49	53
	mm	1143	1245	1346
Length of B	inch	21	21	21
	mm	533	533	533
Length of C	inch	17-1/2	21-1/50	24-1/2
	mm	445	534	622
Length of D	inch	15-3/4	19-5/16	22-27/32
	mm	400	490	580
Length of E	inch	10-1/4	10-1/4	10-1/4
	mm	260	260	260

Recommended size of filter

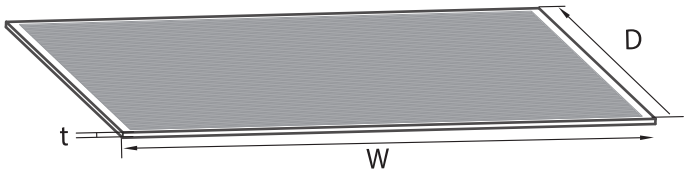

(unit: inch/mm)

NOTE:
The user needs to purchase a standard filter that meets the requirements of UL900.
If you have questions about the selection of filters, consult the manufacturer.

Model(Btu/h)		18K-24K	30K-36K	48K-60K
Length of W	inch	16	20	23
	mm	406.4	495.3	584.2
Length of D	inch	20	20	20
	mm	508	508	508
Length of t	inch	1	1	1
	mm	25.4	25.4	25.4

Installation Position Requirements

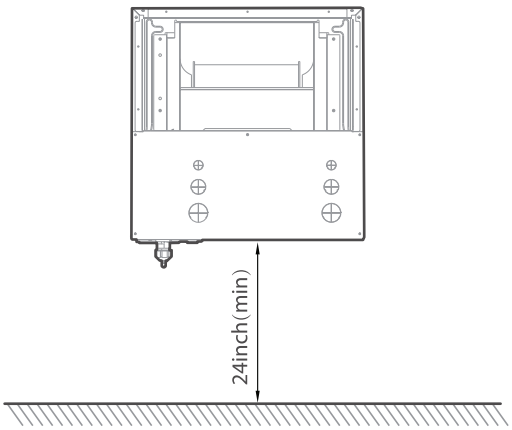

Vertical installations

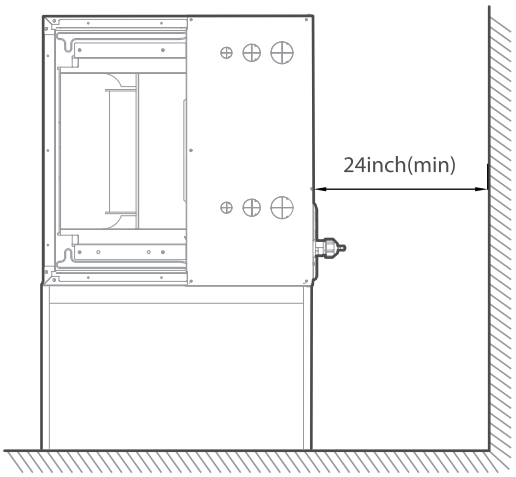

Horizontal installations

NOTICE FOR DUCT CONNECTIONS:

It should be assembled accordance to the instructions.

It should be insulated and use a Vapor Barrier.

It should be Flexible suspension mounted and not fastened

It should be fabricated and installed in accordance with local and/or national codes.

More Requirements

- Air supply and return may be handled in one of several ways best suited to the installation (See table for dimensions for duct inlet and outlet connections). The vast majority of problems encountered with combination cooling systems can be linked to improperly designed or installed duct systems. It is therefore highly important to the success of an installation that the duct system be properly designed and installed. Use flexible duct collars to minimize the transmission of vibration/noise into the conditioned space. Where return air duct is short, or where sound could potentially to be a problem, sound absorbing liner should be used inside the duct.
- Duct must be insulated where it runs through an unconditioned space during the cooling season. The use of a vapor barrier is recommended to prevent absorption of moisture from the surrounding air into the insulation.
- The supply air duct connection should be properly sized by use of a transition to match unit opening.
- All ducts should be suspended using flexible hangers and never fastened directly to the structure. This unit is not designed for nonducted (free blow) applications.
- Duct work should be fabricated and installed in accordance with local and/or national codes.

⚠ CAUTION

A field-fabricated secondary drain pan, with a drain pipe to the outside of the building, is required in all installations over a finished living space or in any area that may be damaged by overflow from the main drain pan. In some localities, local codes may require a secondary drain pan for any horizontal installation.

Selection of installation direction

Different installation directions

The units can be installed in a vertical (down and up) and Horizontal (right and left) configuration.

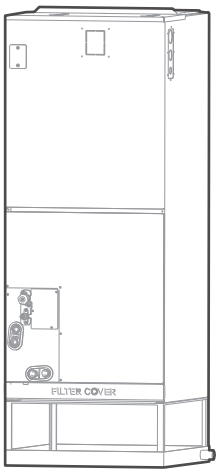

Vertical up

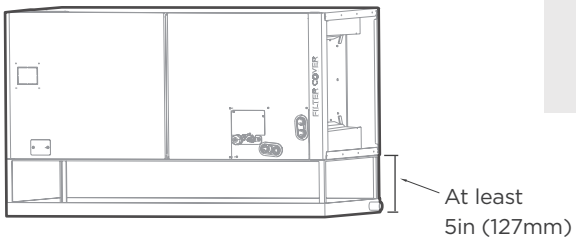

Horizontal

NOTICE

- For horizontal installation, a secondary drain pan (not supplied) must be installed.

Airflow direction of different installation directions

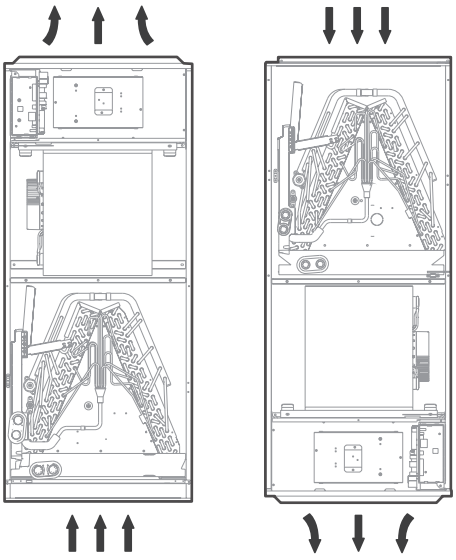

Upflow

Downflow

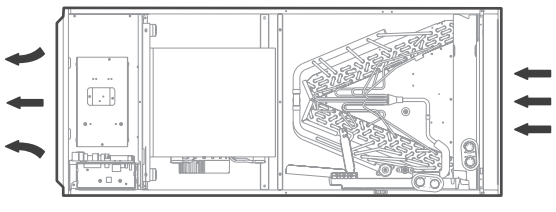

Horizontal left

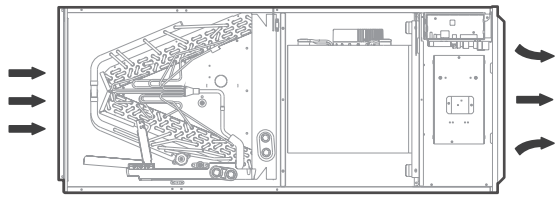

Horizontal right

NOTICE

- Vertical up and horizontal left installation does not need to change the direction of evaporator.

Connecting the wire and pipes (pipes and drainage pipes)

Please follow these steps to perform **Vertical down** installation and **Horizontal right** installation:

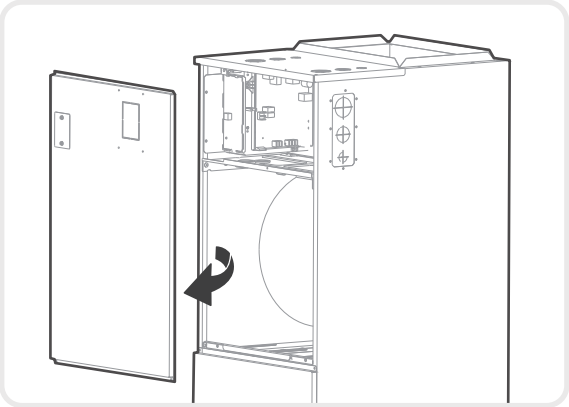

Step 1

Open the upper cover.

Step 2

Open the cover of the electronic control box.

Step 3

Connect the wire according to the wiring diagram.

Step 4

Connect the pipes and install the drainage pipes.

Down flow and horizontal right instructions

NOTICE

The unit may be installed in one of the upflow, downflow, horizontal left or horizontal right orientations.

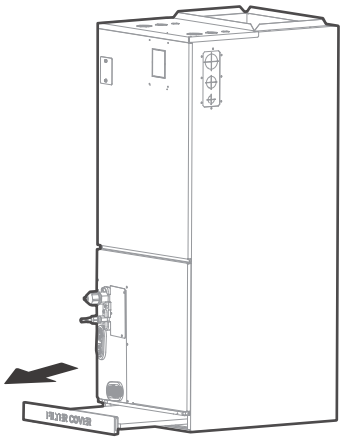

Step 1

Remove the filter door, then take the filter off.

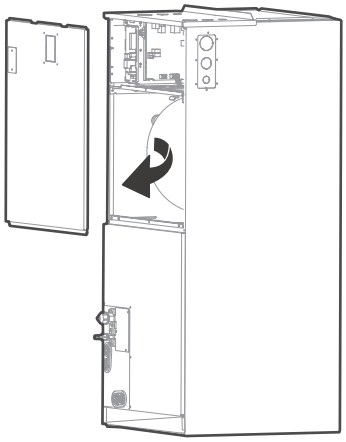

Step 2

Remove the upper cover assembly.

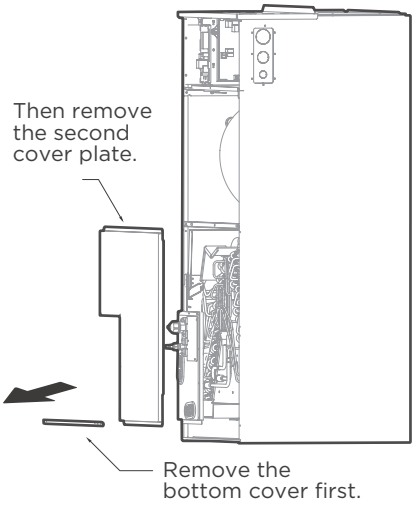

Step 3

Remove evaporator cover plate.

Step 4

Indication of the position of each temperature sensorof the evaporator, confirm yourmodel.

18-24K model

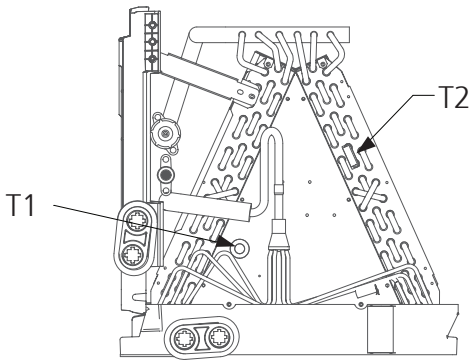

30-36K model

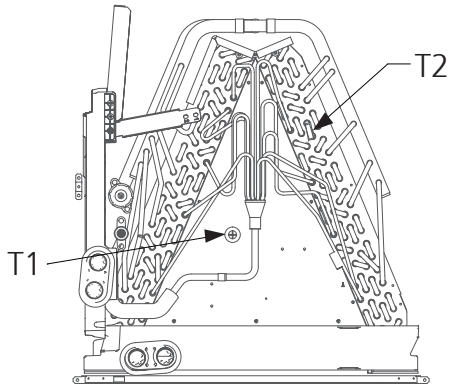

48-60K model

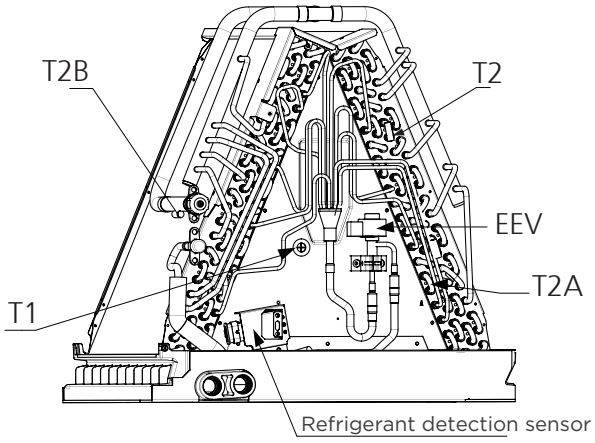

Step 5

Unplug temperature sensors T1,T2, refrigerant detection sensor from the control board.
T1: IDU room temp. sensor (T1)
T2: IDU coil temp. sensor (T2)

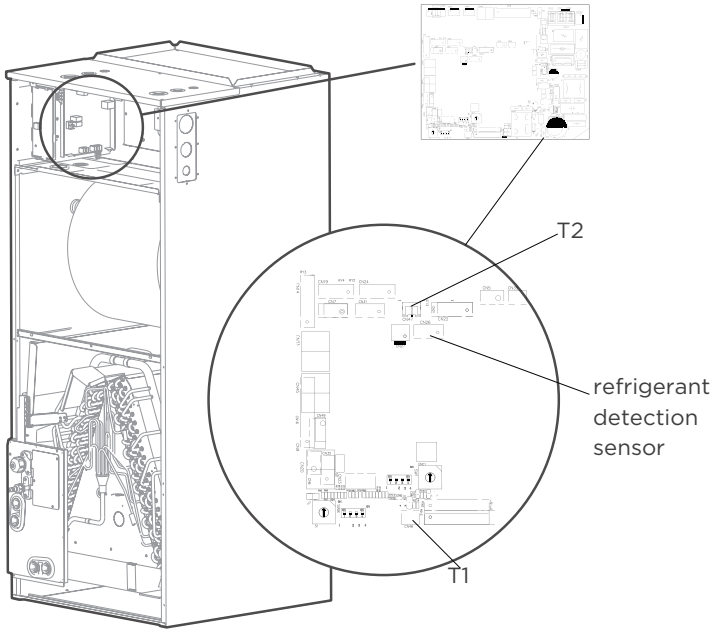

Step 6

Remove T1, T2, refrigerant detection sensor wire ties.

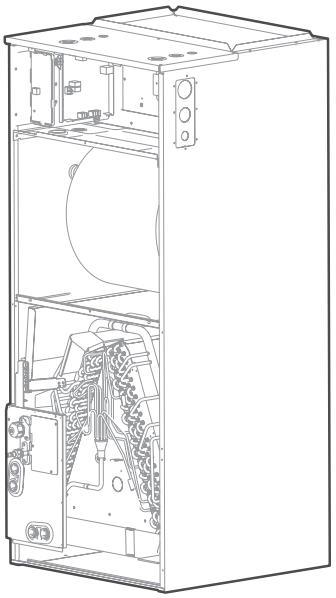

Step 7

Take out the evaporator and drain pan and rotate 180° (when your equipment need to be vertical downed configuration).

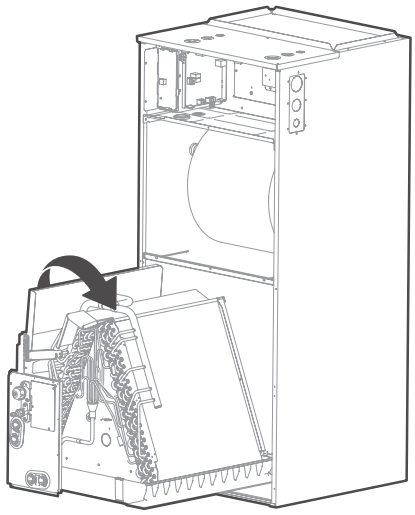

Step 8

Adjust the mounting parts position according to the direction of equipment.

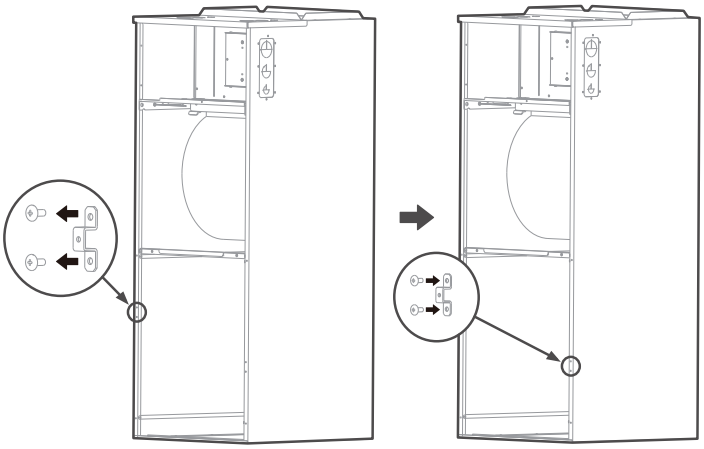

Step 9

Reinstall the evaporator and drain pan.

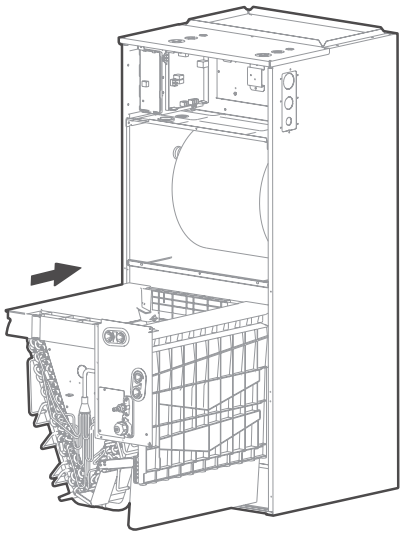

Step 10

Reinstall T1, T2 sensor plug and tie up the sensor wires.

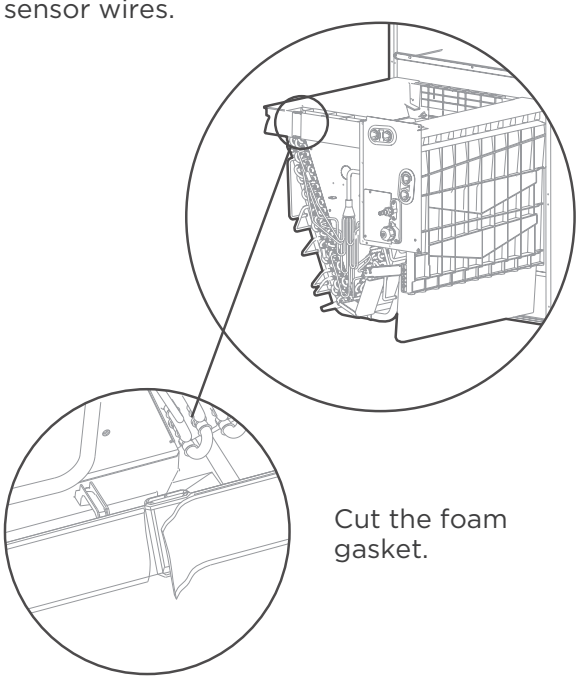

Cut the foam gasket.

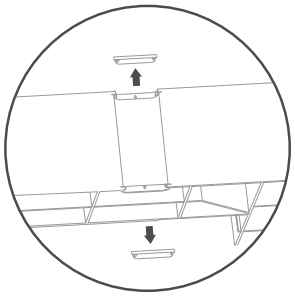

Remove knockouts as shown in the figure.

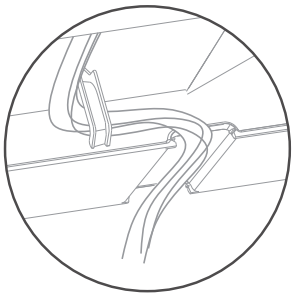

Hook the wire into the buckle and go down from the wire slot.

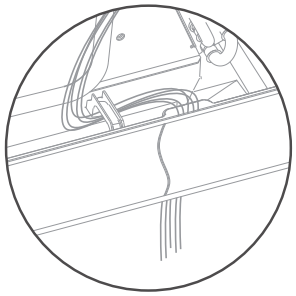

Replace foam gasket over wires.

NOTICE

The wire body needs to pass through the wire groove from the drain pan and be stuck on the hook of the drain pan.

Step 11

The evaporator is assembled in place.

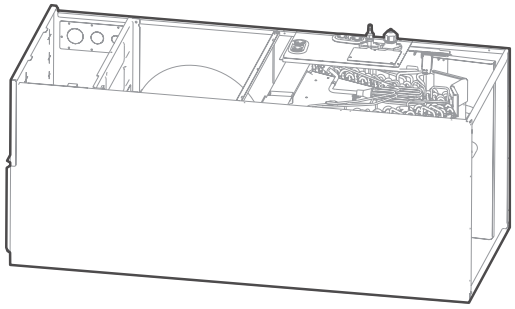

Step 12

Use cable ties to fix the room temperature sensor as shown in the figure.

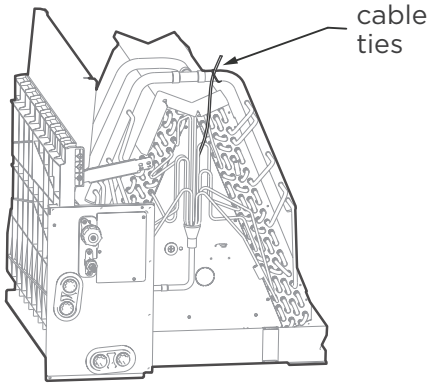

Step 13

Reinstall evaporator cover plate.

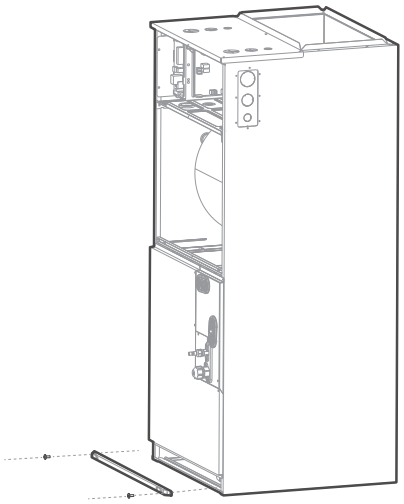

Step 14

Connect the wire according to the wiring diagram.

Step 15

Reassemble the upper cover and reinstall the filter, filter cover plate.

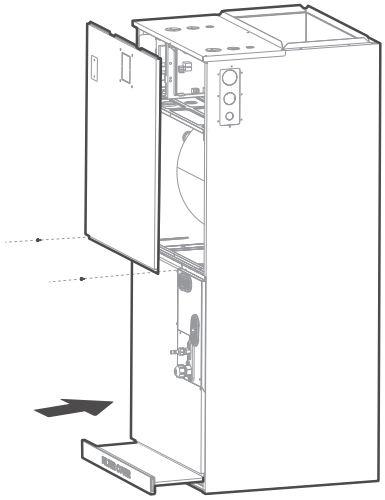

Step 16

Connect the pipes and install the drainage pipes.

⚠ CAUTION FOR ALL PIPES INSTALLATION

- Insulate all piping to prevent condensation, which could lead to water damage.
- The drainpipe is used to drain water away from the unit. If the drainpipe is bent or installed incorrectly, water may leak and cause a water-level switch malfunction.
- In HEAT mode, the outdoor unit will discharge water. Ensure that the drain hose is placed in an appropriate area to avoid water damage and icy conditions on walkways.
- **DO NOT** pull the drainpipe forcefully. This could disconnect it.

NOTICE

If installed above a finished living space, a secondary drain pan (as required by many building codes), must be installed under the entire unit and its condensate drain line must be routed to a location such that the user will see the condensate discharge.

NOTICE ON PURCHASING PIPES

Installation requires pvc pipe or other suitable material per local and national codes, which can be obtained at your local hardware store or dealer.

⚠ WARNING

- After removal of drain pan plug (s), check drain hole (s) to verify that drain opening is fully open and free of any debris. Also check to make sure that no debris has fallen into the drain pan during installation that may plug up the drain opening. Seal around the exiting drain pipe, liquid and suction lines to prevent infiltration of humid air.
- On units of this type, where the blower “draws” rather than “blows” air through the coil, traps must be installed in the condensate drain lines (primary and auxiliary, if used). Traps prevent the blower from drawing air through the drain lines into the air supply.

Vertical Installations

These units operate with a negative pressure at the drain connections and a drain trap is required. The trap needs to be installed as close to the unit as possible. Make sure the top of the trap is below the connection to the drain pan to allow complete drainage of the pan.

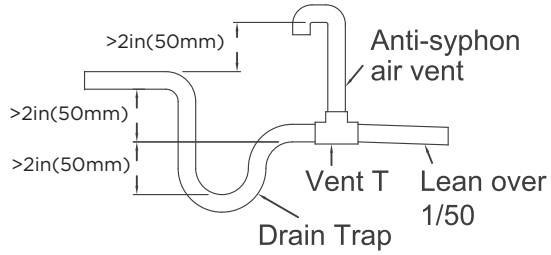

Vertical discharge

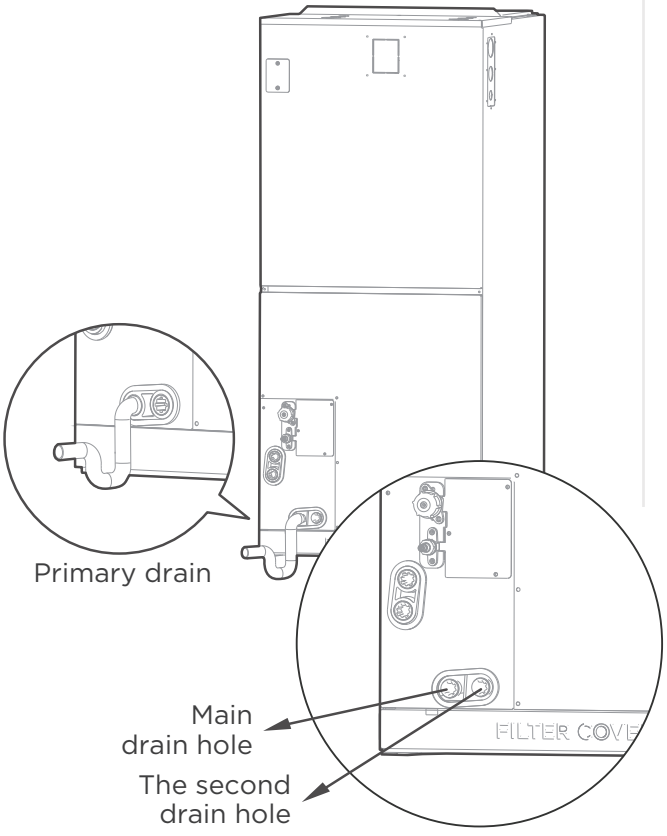

NOTICE

Horizontal runs must also have an anti-siphon air vent (standpipe) install ahead of the horizontal run to eliminate air trapping.

NOTE ON DRAINPIPE INSTALLATION

- The Figure shows how to trap or plug all drains during vertical discharge.
- The Figure shows how to trap or plug all drains during right-hand discharge.
- The seal plug are supplied as accessories and should be screwed tightly only by hand.
- Incorrect installation could cause water to flow back into the unit and flood.

⚠ CAUTION

The drainpipe outlet should be at least 5cm (1.9in) above the ground. If it touches the ground, the unit may become blocked and malfunction.

REFRIGERANT PIPING CONNECTION

⚠ WARNING

All field piping must be completed by a licensed technician and must comply with the local and national regulations.

- When the air conditioner is installed in a small room, measures must be taken to prevent the refrigerant concentration in the room from exceeding the safety limit.
  in the event of refrigerant leakage. If the refrigerant leaks and its concentration exceeds its proper limit, hazards due to lack of oxygen may result.
- When installing the refrigeration system, ensure that air, dust, moisture or foreign substances do not enter the refrigerant circuit. Contamination in the system may cause poor operating capacity, high pressure in the refrigeration cycle, explosion or injury.
- Ventilate the area immediately if there is refrigerant leakage during the installation. Leaked refrigerant gas is both toxic and may be flammable. Ensure there is no refrigerant leakage after completing the installation work.

Notes on pipe length and elevation

The maximum length and drop height based on models. (Unit:ft./m)

Products series	Capacity (Btu/h)	MaxLength of piping		Maximum drop height	
		ft.	m	ft.	m
Current Loop	18K	98.4	30	65.6	20
	24K/30K/33K	164	50	82	25
	36K	246	75	98.4	30
RS485	36K/48K/60K	246	75	98.4	30

Ensure that the length of the refrigerant pipe, the number of bends, and the drop height between the indoor and outdoor units meets the requirements shown in the table next to it:

Name		Model	Pipe specification		Remark
			Liquid Side	Gas Side	
Connecting pipe assembly	Current Loop	18K	Ø1/4in(Ø6.35mm)	Ø1/2in(Ø12.7mm)	Pipes are not included in the accessories and you need to purchase it separately from the local dealer.
		24K	Ø3/8in(Ø9.52mm)	Ø5/8in(Ø16mm)	
		30K	Ø3/8in(Ø9.52mm)	Ø5/8in(Ø16mm)	
		33K	Ø3/8in(Ø9.52mm)	Ø3/4in(Ø19mm)	
		36K	Ø3/8in(Ø9.52mm)	Ø5/8in(Ø16mm)	
	RS485	36K	Ø3/8in(Ø9.52mm)	Ø3/4in(Ø19mm)	
		48K	Ø3/8in(Ø9.52mm)	Ø3/4in(Ø19mm)	
		60K	Ø3/8in(Ø9.52mm)	Ø3/4in(Ø19mm)	

⚠ CAUTION

Oil traps

If oil flows back into the outdoor unit's compressor, this might cause liquid compression or deterioration of oil return. Oil traps in the rising gas piping can prevent this.
An oil trap should be installed every 20ft (6m) of vertical suction line riser (＜36000Btu/h unit). An oil trap should be installed every 32.8ft (10m) of vertical suction line riser (⩾36000Btu/h unit).

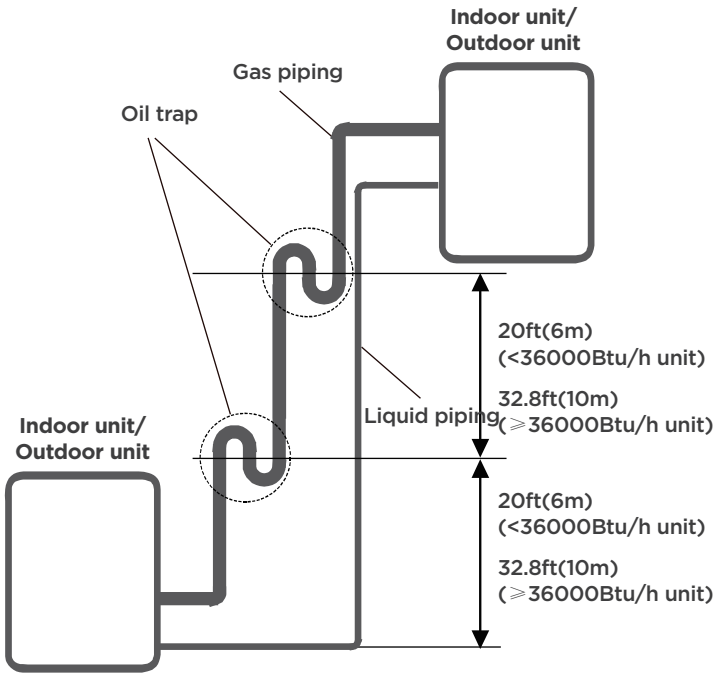

Connection Instructions—Refrigerant Piping

Step 1: Cut pipes

When preparing refrigerant pipes, take extra care to cut and flare them properly. This will ensure efficient operation and minimize the need for future maintenance.

- Measure the distance between the indoor and outdoor units.
- Using a pipe cutter, cut the pipe a little longer than the measured distance.
- Make sure that the pipe is cut at a perfect 90° angle.

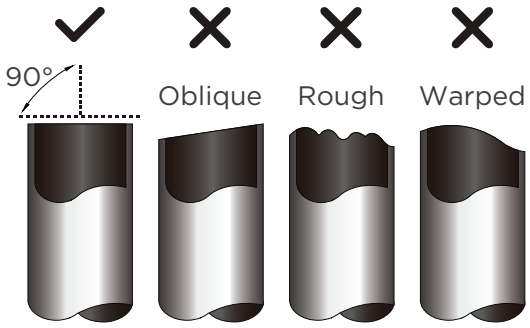

DO NOT DEFORM PIPE WHILE CUTTING

Be extra careful not to damage, kink, or deform the pipe while cutting. This will drastically reduce the heating performance

Step 2: Remove burrs

Burrs can affect the air-tight seal of refrigerant piping connection. They must be completely removed.

- Hold the pipe at a downward angle to prevent burrs from falling into the pipe.
- Using a reamer or deburring tool, remove all burrs from the cut section of the pipe.

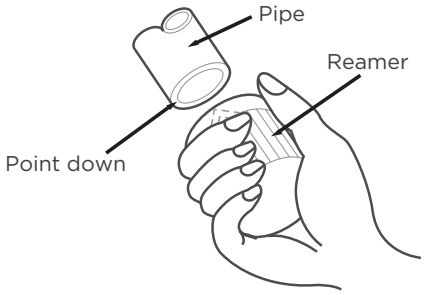

Step 3: Flare pipe ends

Proper flaring is essential to achieve an airtight seal.

- After removing burrs from cut pipe, seal the ends with PVC tape to prevent foreign materials from entering the pipe.
- Sheath the pipe with insulating material.
- Place flare nuts on both ends of pipe. Make sure they are facing in the right direction, because you can't put them on or change their direction after flaring.

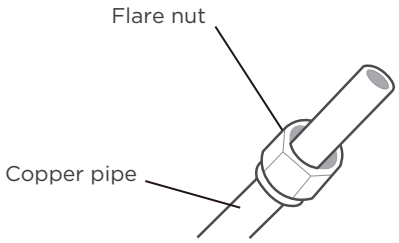

- Remove PVC tape from ends of pipe when ready to perform flaring work.

- Clamp flare from on the end of the pipe. The end of the pipe must extend beyond the flare form.

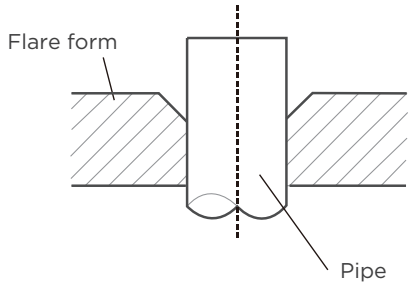

- Place flaring tool onto the form.
- Turn the handle of the flaring tool clockwise until the pipe is fully flared.

PIPING EXTENSION BEYOND FLARE FORM

Pipe gauge	Tightening torque	Flare dimension(A) (Unit:inch/mm)		Flare shape
		Min.	Max.	
Ø1/4in (Ø6.35mm)	18-20 N·m (180-200kgf·cm)	0.33/8.4	0.34/8.7	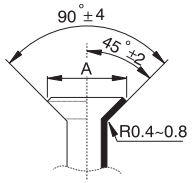
Ø3/8in (Ø9.52mm)	32-39 N·m (320-390kgf·cm)	0.52/13.2	0.53/13.5	
Ø1/2in (Ø12.7mm)	49-59 N·m (490-590kgf·cm)	0.64/16.2	0.65/16.5	
Ø5/8in (Ø16mm)	57-71 N·m (570-710kgf·cm)	0.76/19.2	0.78/19.7	
Ø3/4in (Ø19mm)	67-101 N·m (670-1010kgf·cm)	0.91/23.2	0.93/23.7	

- Remove the flaring tool and flare form, then inspect the end of the pipe for cracks and even flaring.

Step 4: Connect pipes

Connect the copper pipes to the indoor unit first, then connect it to the outdoor unit. You should first connect the low-pressure pipe, then the high-pressure pipe.

- When connecting the flare nuts, apply a thin coat of refrigeration oil to the flared ends of the pipes.
- Align the center of the two pipes that you will connect.
- Tighten the flare nut snugly by hand.
- Using a wrench, grip the nut on the unit tubing.
- While firmly gripping the nut, use a torque wrench to tighten the flare nut according to the torque values in above table.

NOTICE

Use both a spanner and a torque wrench when connecting or disconnecting pipes to/from the unit.

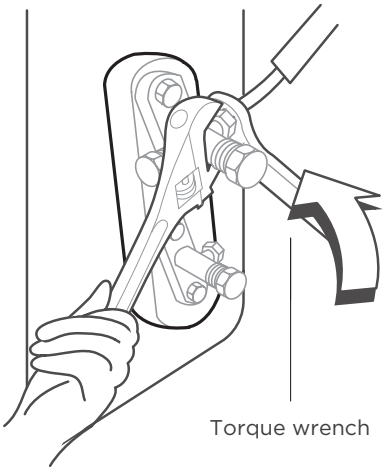

⚠ CAUTION

Ensure to wrap insulation around the piping. Direct contact with the bare piping may result in burns or frostbite.

- Make sure the pipe is properly connected. Over tightening may damage the bell mouth and under tightening may lead to leakage.

NOTICE

MINIMUM BEND RADIUS

Carefully bend the tubing in the middle according to the diagram below.
DO NOT bend the tubing more than 90° or more than 3 times.

Use appropriate tool

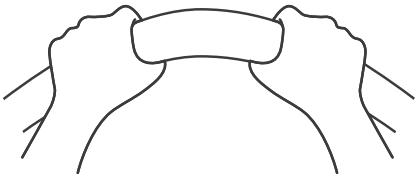

min-radius 3.9in(100mm)

- After connecting the copper pipes to the indoor unit, wrap the power cable, signal cable and the piping together with binding tape.

NOTICE

DO NOT intertwine or cross the signal cable with any other wiring.

- Thread this pipeline through the wall and connect it to the outdoor unit.
- Insulate all the piping, including the valves of the outdoor unit.
- Open the stop valves of the outdoor unit to start the flow of the refrigerant between the indoor and outdoor unit.

⚠ CAUTION

Check to make sure there is no refrigerant leak after completing the installation work. If there is a refrigerant leak, ventilate the area immediately and evacuate the system (refer to the Air Evacuation section of this manual).

Air-Handler Air Conditioners Refrigerant Piping Connection

Correct Refrigerant piping Connecting installation methods

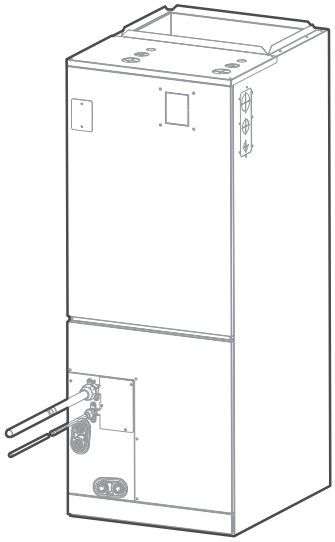

Plan 1

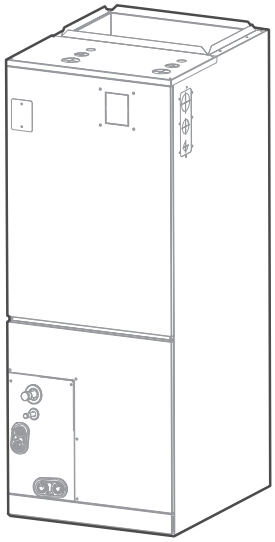

Plan 2

Heating performance

After the unit is installed, wrap the piping and brass fitting with foam tape.

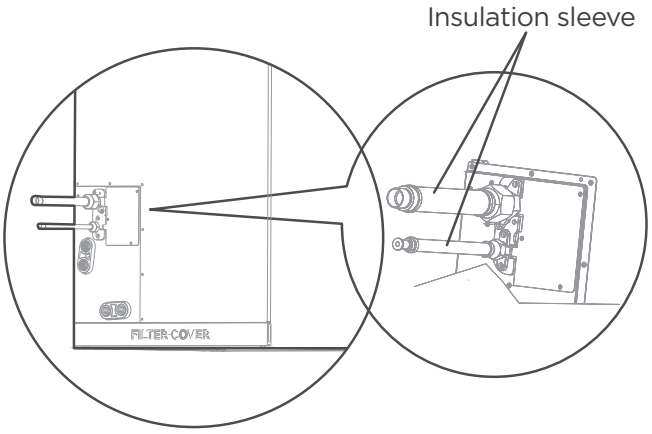

You need to wrap all the connected copper pipes, nuts and other metal parts into the sponge.

INSTALLATION OF ELECTRIC AUXILIARY HEAT MODULE

NOTICE

Installation must be performed by an licensed contractor. Please make necessary precaution when performing the installation operation.

Accessories

Name	Quantity	Name	Quantity
Manual	2	Silicone breaker cover	1
Foam gasket	1	Electric auxiliary heating wiring diagram	1
Screws	7	Circuit breaker label	1

Model size selection

For installations requiring supplemental heating, the optional Electric Auxiliary Heat Module is available in sizes from 3kW to 25kW to accommodate appropriate sizing given the specific heat load and electrical requirements of each installation. Please refer to the table below for selection of available sizes of each outdoor unit model, being sure to avoid improper matching.

OUTDOOR UNIT MODEL (Btu/h)	3kW	5kW	8kW	10kW	15kW	20kW	25kW
18K	Y	Y	Y	Y	-	-	-
24K	-	Y	Y	Y	Y	-	-
30K	-	Y	Y	Y	Y	-	-
36K	-	Y	Y	Y	Y	Y	-
48K	-	-	Y	Y	Y	Y	-
60K	-	-	-	Y	Y	Y	Y

NOTICE

Only use matched modules certified for use with model. Please refer to the Electric Auxiliary Heat Model specification for additional details to ensure proper selection and installation.

Preparations for Installation

Before installation, please confirm the electric auxiliary heat module and supplied accessories are complete and free of any damage. Do not attempt to install if damage is present.

Electric Auxiliary Heat Module installation and Wiring Operation

Step 1

Open the upper cover.

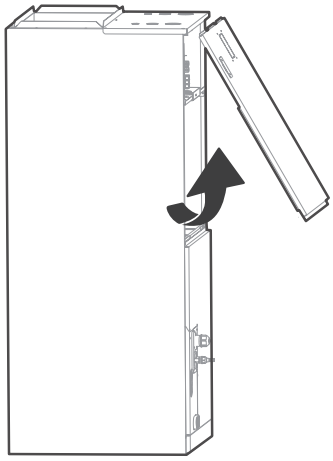

Step 2

Use tools to remove the knock-out holes of upper cover.

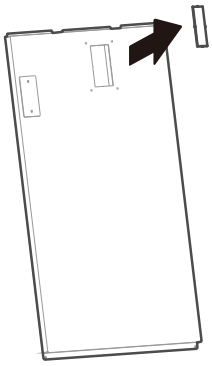

Step 3

Remove the terminal block and power wires, loosen the screws, and remove the electric auxiliary heating cover.

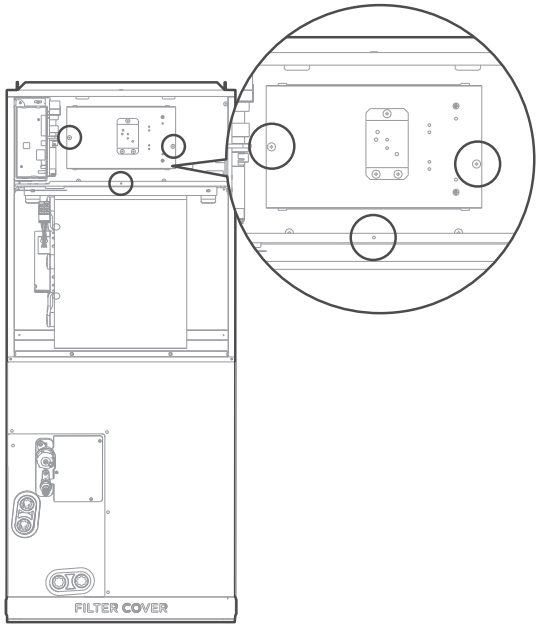

Step 4

Install the electric auxiliary heating assembly the front, and note that the support assembly must lock into the support holes in the back of the cabinet.

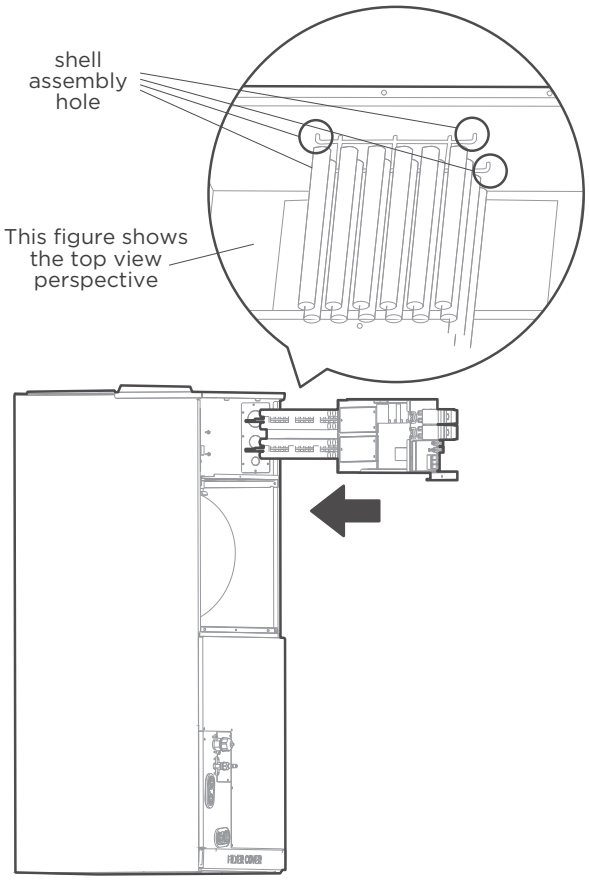

Step 5

Tighten the mounting screws.

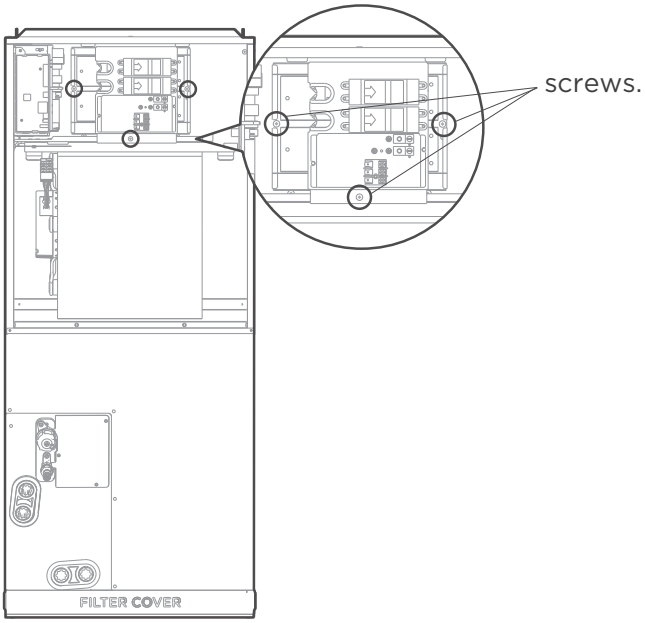

Step 6

Wire according to the wiring nameplate. Apply the wiring diagram to the inside cover wiring is completed for future reference and maintenance. Plug the electric heating plugs CN11 and CN12 into the main board.

Step 7

Install the upper cover, and the silicone breaker cover.

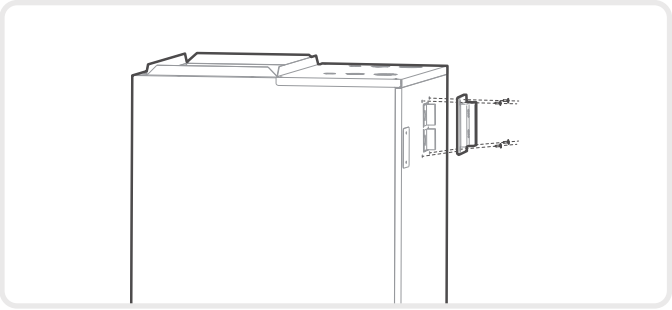

Step 8

After installing the electric auxiliary heat module, apply the circuit breaker label near the silicone breaker cover that was just applied.

NOTE:
The circuit breaker cannot be operated by user.

CONFIRMATION OF INDOOR UNIT

NOTICE

Electric auxiliary heating wiring diagram packed with the accessories.
If branch circuit wire length exceeds 100 ft, consult NEC 210-19a to determine maximum wire length. Use 2% voltage drop.

After the electric heating wiring is connected, please confirm before power on:

- Check all wiring and ensure secure connection of all wiring.
- Ensure that wire size is properly selected per NEC or local codes.

Specifications	Number of circuit breakers	Number of relays	Number of power cord groups	Number of power cord grounding screws
3kW	1	1	2	2
5kW	1	1	2	2
8kW	1	2	2	2
10kW	1	2	2	2
15kw	2	3	3	3
20kW	2	4	3	3
25kW	3	5	4	4

Units without electrical heat

UNIT SIZE		VOITS-PHASE	Rated current	MCA (Minimum Circuit Ampacity)	BRANCH CIRCUIT	
					MIN WIRE SIZE AWG*	FUSE/CKT BKR AMPS
Current Loop	18K	208/230V-1	2.0A	3.0A	14#	15.0
	24K	208/230V-1	3.0A	4.0A	14#	15.0
	30K	208/230V-1	4.5A	6.0A	14#	15.0
	36K	208/230V-1	4.5A	6.0A	14#	15.0
RS485	36K	208/230V-1	4.5A	6.0A	14#	15.0
	48K	208/230V-1	7.8A	9.75A	14#	15.0
	60K	208/230V-1	8.3A	11.0A	14#	15.0

Use copper wire only to connect unit. If other than uncoated (non-plated) 75°C copper wire (solid wire for 10 AWG and smaller, stranded wire for larger than 10 AWG) is used consult applicable tables of the National Electric Code (ANSI/NFPA 70).

NOTICE

The specification may be different between different models, please refer to indoor unit's nameplate.

Auxiliary Heater Electrical Data

Heater Part No.	Heater KW	Internal Circuit Protection	CIRCUIT 1 208/230V			CIRCUIT 2			CIRCUIT 2		
			Heater Amps	MCA (1)	MOP (2)	Heater Amps	MCA (1)	MOP (2)	Heater Amps	MCA (1)	MOP (2)
KEAH-03E(UL)	3	Ckt Bkr	10.8/12.0	14.0/16.0	15.0/20.0	/	/	/	/	/	/
KEAH-05E(UL)	5	Ckt Bkr	18.0/20.0	23.0/27.0	25.0/30.0	/	/	/	/	/	/
KEAH-08E(UL)	8	Ckt Bkr	28.8/32.0	37.0/42.0	40.0/45.0	/	/	/	/	/	/
KEAH-10E(UL)	10	Ckt Bkr	36.0/40.0	46.0/53.0	50.0/60.0	/	/	/	/	/	/
KEAH-15E(UL)	15	Ckt Bkr	18.0/20.0	23.0/27.0	25.0/30.0	36.0/40.0	46.0/53.0	50.0/60.0	/	/	/
KEAH-20E(UL)	20	Ckt Bkr	36.0/40	46.0/53.0	50.0/60.0	36.0/40.0	46.0/53.0	50.0/60.0	/	/	/
KEAH-25E(UL)	25	Ckt Bkr	18.0/20.0	23.0/27.0	25.0/30.0	36.0/40.0	46.0/53.0	50.0/60.0	36.0/40.0	46.0/53.0	50.0/60.0

OUTDOOR UNIT INSTALLATION

NOTICE

Install the unit by following local switches and regulations, there may be differ slightly between different regions.

Select the installation location of outdoor units

Before installing the outdoor unit, you must choose an appropriate location. The following are standards that will help you choose an appropriate location for the unit.

Proper installation locations meet the following standards:

☑ Firm and solid—the location can support the unit and will not vibrate.

☑ Noise from the unit will not disturb other people.

☑ Good air circulation and ventilation.

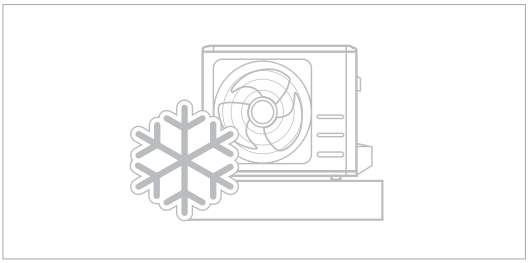

☑ Where snowfall is anticipated, take appropriate measures to prevent ice buildup and coil damage.

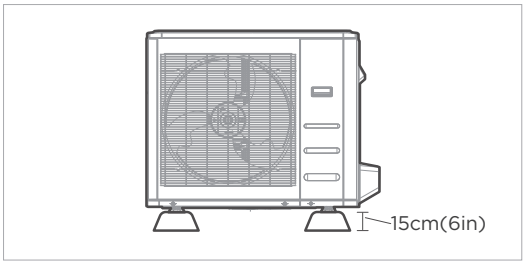

☑ The outdoor unit must be installed on risers of at least 15cm(6in) in height or per local code to get unit above local mean snow fall.

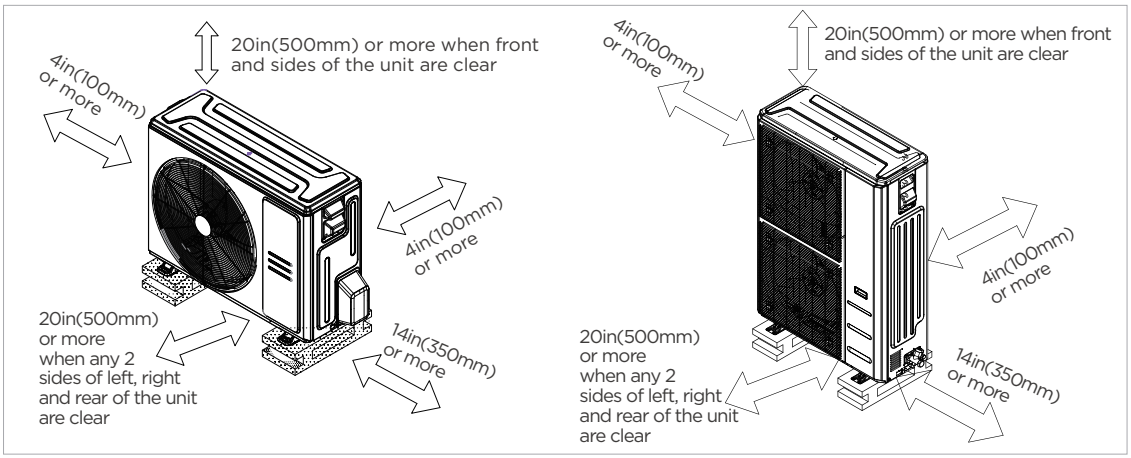

☑ Meets all spatial requirements shown in Installation Space Requirements above.

DO NOT install unit in the following locations:

- Near an obstacle that will block air inlets and outlets.
- In a location that is exposed to large amounts of dust.
- Near animals or plants that will be harmed by hot air discharge.
- Near any source of combustible gas
- Near a public street, crowded areas, or where noise from the unit will disturb others.

⚠ CAUTION:

SPECIAL CONSIDERATIONS FOR EXTREME WEATHER

If the unit is exposed to heavy wind:

Install unit so that air outlet fan is at a 90° angle to the direction of the wind. If needed, build a barrier in front of the unit to protect it from extremely heavy winds. See Figures below.

If the unit is frequently exposed to heavy rain or snow:

Build a shelter above the unit to protect it from the rain or snow. Be careful not to obstruct air flow around the unit.

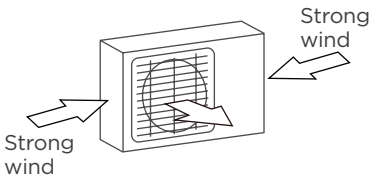

90° angle to the direction of the wind

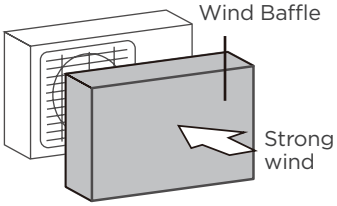

Build a wind Baffle to protect the unit

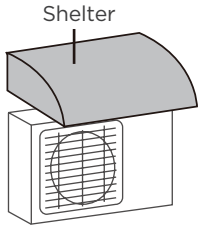

Build a shelter to protect the unit

Install drain joint (Heat pump unit only)

Before bolting the outdoor unit in place, you must install the drain joint at the bottom of the unit.

Note that there are two different types of drain joints depending on the type of outdoor unit.

If the drain joint comes with a rubber seal (see **Fig.A**), do the following:

1. Fit the rubber seal on the end of the drain joint that will connect to the outdoor unit.
2. Insert the drain joint into the hole in the base pan of the unit.
3. Rotate the drain joint 90° until it clicks in place facing the front of the unit.
4. Connect a drain hose extension (not included) to the drain joint to redirect water from the unit during heating mode.

If the drain joint doesn't come with a rubber seal (see **Fig. B**), do the following:

1. Insert the drain joint into the hole on the base pan, press firmly to ensure it is properly installed and will not become loose.
2. Connect a drain hose extension (not included) to the drain joint to redirect water from the unit during heating mode.

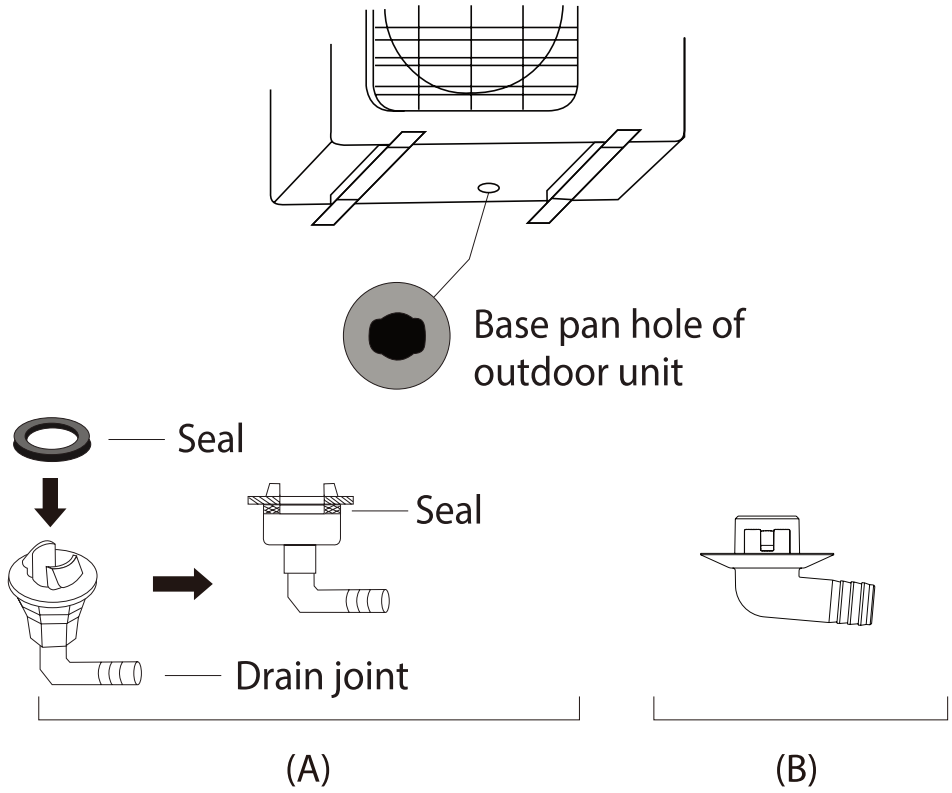

IN COLD CLIMATES

In cold climates, make sure that the drain hose is as vertical as possible to ensure swift water drainage. If water drains too slowly, it can freeze in the hose and flood the unit.

Anchor outdoor unit

The outdoor unit can be anchored to the ground or to a wall-mounted bracket with bolt (M10). Prepare the installation base of the unit according to the dimensions below.

Outdoor Unit Types and Specifications

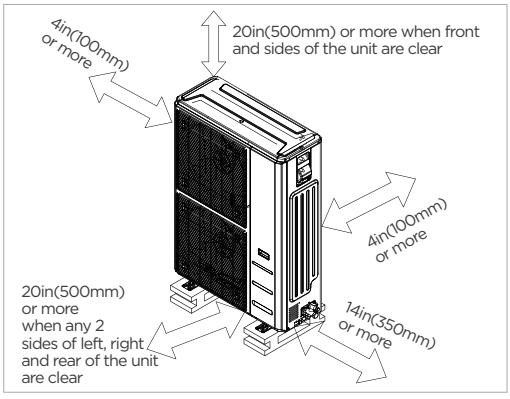

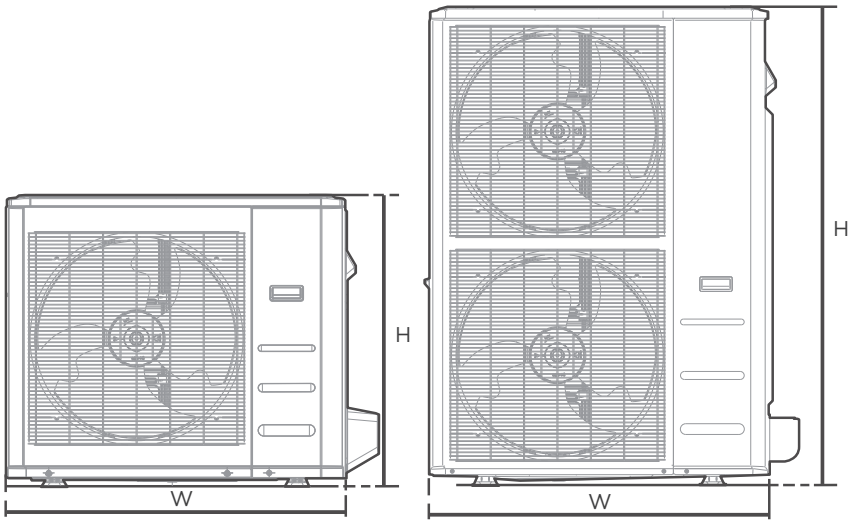

Front view

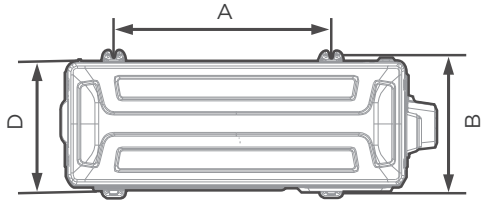

Top view

Outdoor Unit Dimensions						Mounting Dimensions			
W		H		D		A		B	
inch	mm	inch	mm	inch	mm	inch	mm	inch	mm
31-11/16	805	21-13/16	554	13	330	20-1/8	511	12-1/2	317
35	890	26-1/2	673	13-15/32	342	26-1/8	663	13-15/16	354
37-1/4	946	31-29/32	810	16-5/32	410	26-1/2	673	15-7/8	403
38-19/32	980	38-3/8	975	16-11/32	415	24-1/4	616	15-5/8	397
37-1/2	952	52-1/2	1333	16-11/32	415	24-35/36	634	15-29/32	404

(unit: inch/mm)

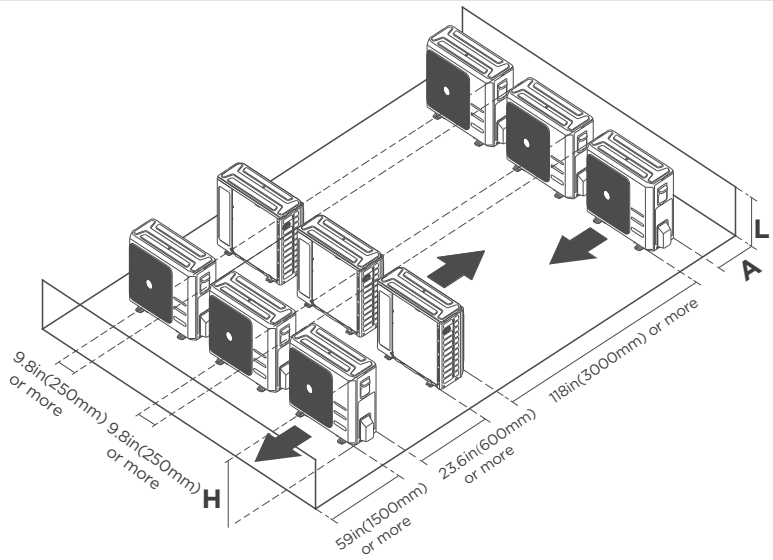

Rows of series installation

The relations between H, A and L are as follows.

	L	A
L ⩽ H	L ⩽ 1/2H	9-13/16in(250mm) or more
	1/2H < L ⩽ H	11-13/16in(300mm) or more
L > H	Cannot be installed	

If you will install the unit on the ground or on a concrete mounting platform, DO THE FOLLOWING:

- Mark the positions for four expansion bolts based on dimensions chart.
- Pre-drill holes for expansion bolts.
- Place a nut on the end of each expansion bolt.
- Hammer expansion bolts into the pre-drilled holes.
- Remove the nuts from expansion bolts, and place outdoor unit on bolts.
- Put washer on each expansion bolt, then replace the nuts.
- Using a wrench, tighten each nut until snug.

⚠ WARNING

WHEN DRILLING INTO CONCRETE, EYE PROTECTION IS RECOMMENDED AT ALL TIMES.

If you will install the unit on a wall-mounted bracket, DO THE FOLLOWING:

- Mark the position of bracket holes based on dimensions chart.
- Pre-drill the holes for the expansion bolts.
- Place a washer and nut on the end of each expansion bolt.
- Thread expansion bolts through holes in mounting brackets, put mounting brackets in position, and hammer expansion bolts into the wall.
- Check that the mounting brackets are level.
- Carefully lift unit and place its mounting feet on brackets.
- Bolt the unit firmly to the brackets.
- If allowed, install the unit with rubber isolator pads o reduce vibrations and noise.

⚠ CAUTION

Make sure that the wall is made of solid brick, concrete, or of similarly strong material. The wall must be able to support at least four times the weight of the unit.

WIRING PRECAUTIONS

⚠ WARNING

BEFORE PERFORMING ANY ELECTRICAL WORK, READ THESE WARNINGS.

- All wiring must comply with local and national electrical codes, regulations and must be installed by a licensed electrician.
- All electrical connections must be made according to the Electrical Connection Diagram located on the panels of the indoor and outdoor units.
- If there is a serious safety issue with the power supply, stop work immediately. Explain your reasoning to the client, and refuse to install the unit until the safety issue is properly resolved.
- Power voltage should be within 90-110% of rated voltage. Insufficient power supply can cause malfunction, electrical shock, or fire.
- Installation of an external surge suppressor at the outdoor disconnect is recommended.
- If connecting power to fixed wiring, a switch or circuit breaker that disconnects all poles and has a contact separation of at least 1/8in (3mm) must be incorporated in the fixed wiring. The qualified technician must use an approved circuit breaker or switch.
- Only connect the unit to an individual branch circuit. Do not connect another appliance to that circuit.
- Make sure to properly ground the air conditioner.
- Every wire must be firmly connected. Loose wiring can cause the terminal to overheat, resulting in product malfunction and possible fire.
- Do not let wires touch or rest against refrigerant tubing, the compressor, or any moving parts within the unit.
- To avoid getting an electric shock, never touch the electrical components soon after the power supply has been turned off. After turning off the power, always wait 10 minutes or more before you touch the electrical components.
- Make sure that you do not cross your electrical wiring with your signal wiring.
- This may cause distortion, interference or possibly damage to circuit boards.
- No other equipment should be connected to the same power circuit.
- Connect the outdoor wires before connecting the indoor wires.

⚠ WARNING

BEFORE PERFORMING ANY ELECTRICAL OR WIRING WORK, TURN OFF THE MAIN POWER TO THE SYSTEM.

Wiring overview

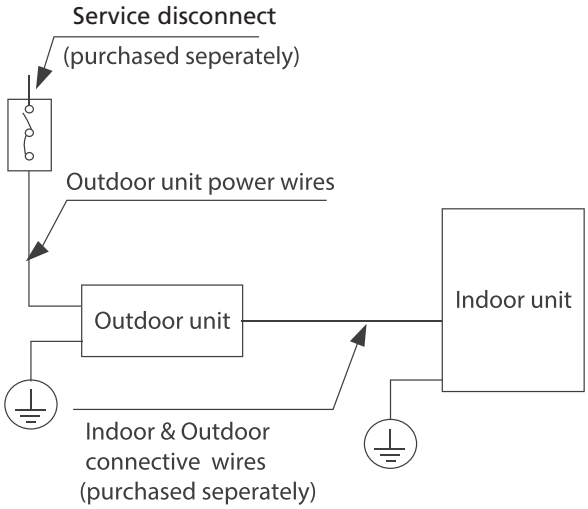

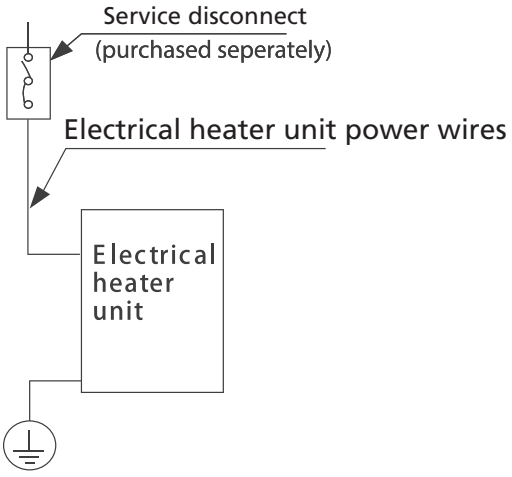

Service Disconnect shall select as required by Local, regional, and national codes.

NOTICE

The diagrams are for explanation purpose only. Your machine may be slightly different. The actual diagram shall prevail.

OUTDOOR UNIT WIRING

⚠ WARNING

Before performing any electrical or wiring work, turn off the main power to the system.

Step 1: Prepare the cable for connection.

1. You must first choose the right cable size.
2. Using wire strippers, strip the rubber jacket from both ends of the signal cable to reveal approximately 5.9in(150mm) of wire.
3. Strip the insulation from the ends.
4. Stranded wire requires u-lugs or ring terminals to be crimped onto the ends of the wire.

NOTICE

- When connecting the wires, strictly follow the wiring diagram found inside the electrical box cover.
- Choose the cable type according to the local electrical switches and regulations.
- Please choose the right cable size according to the Minimum Circuit Ampacity indicated on the name plate of the unit.

Step 2: Remove the electric cover.

Remove the electric cover of the outdoor unit. If there is no cover on the outdoor unit, take off the bolts from the maintenance board and remove the protection board.

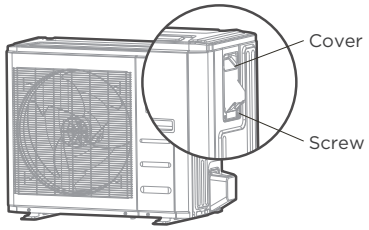

Step 3: Connect the u-lugs to the terminals

Match the wire colors/labels with the labels on the terminal block. Firmly screw the u-lug of each wire to its corresponding terminal.

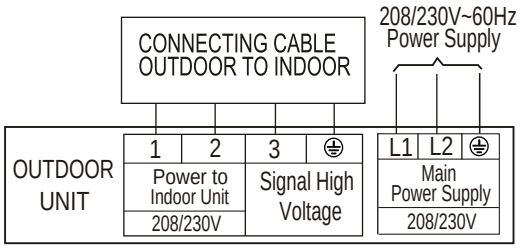

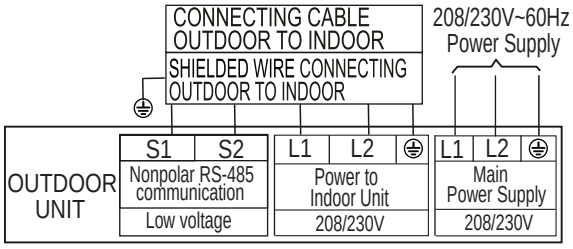

4. Clamp down the cable with the cable clamp.
5. Insulate unused wires with electrical tape. Keep them away from any electrical or metal parts.
6. Reinstall the cover of the electric control box.

In North America

1. Remove the wire cover from the unit by loosening the 3 screws.
2. Remove caps on the conduit panel.
3. Mount the conduit tubes (not included) on the conduit panel.
4. Properly connect both the power supply and low voltage lines to the corresponding terminals on the terminal block.
5. Ground the unit in accordance with local switchs.
6. Be sure to size each wire allowing several inches longer than the required length for wiring.

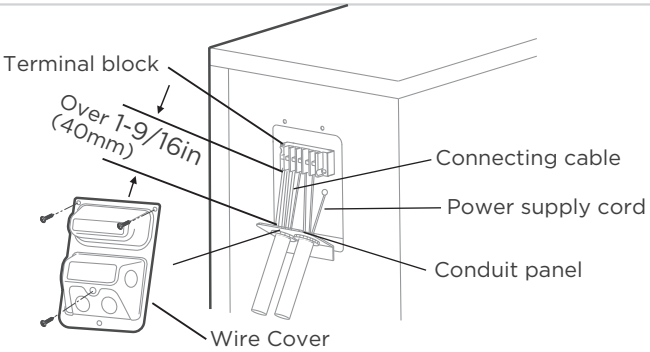

Please select the appropriate through-hole according to the diameter of the wire.

⚠ WARNING

ISOLATE THE POWER SUPPLY LEADS AND COMMUNICATION LEADS BY THE STRAIN RELIF AND KEEP POWER SUPPLY LEADS AWAY FROM COMMUNICATION LEADS.

INDOOR UNIT WIRING

⚠ CAUTION

- While connecting the wires, please strictly follow the wiring diagram.
- The refrigerant circuit can become very hot. Keep the interconnection cable away from the copper tube.

Step 1: Prepare the cable for connection.

1. Using wire strippers, strip the insulating jacket from both ends of the signal cable to reveal about 5.9in (150mm) of the wire.
2. Strip the insulation from the ends of the wires.

Step 2: Open the front panel of the indoor unit.

Using a screwdriver, remove the cover of the electric control box on your indoor unit.

Step 3: Connect the wires to the terminals.

1. Thread the power cable and the signal cable through the wire outlet
2. Match the wire colors/labels with the labels on the terminal block. Firmly screw the wires of each wire to its corresponding terminal. Refer to the Serial Number and Wiring Diagram located on the cover of the electric control box.

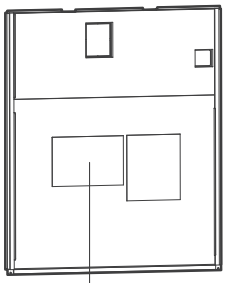

Wiring diagram

Type A

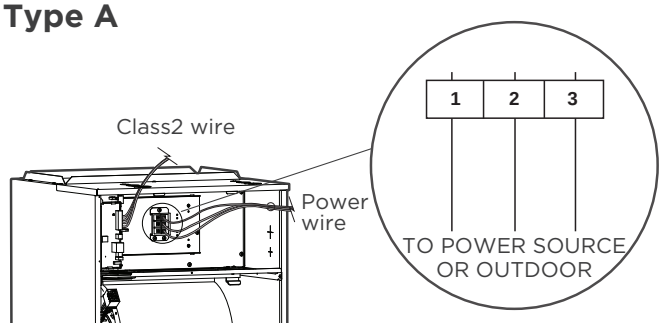

Type B

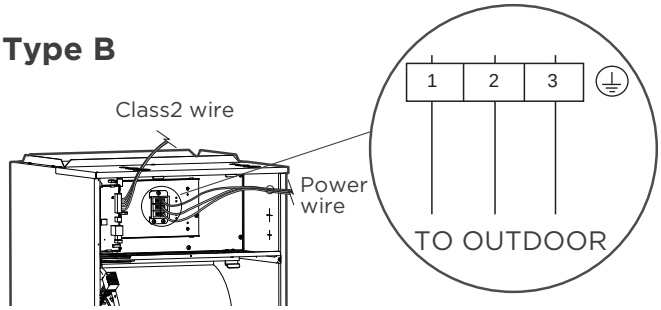

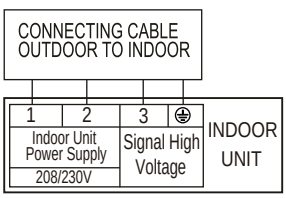

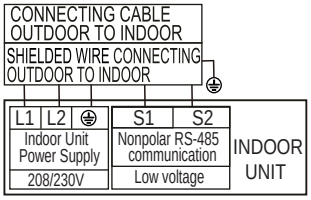

⚠ WARNING

ISOLATE THE POWER SUPPLY LEADS AND COMMUNICATION LEADS BY THE STRAIN RELIF AND KEEP POWER SUPPLY LEADS AWAY FROM COMMUNICATION LEADS.

3. Clamp down the cable with the cable clamp. The cable must not be loose or pull on the u-lugs.
4. Reattach the electric box cover.
5. Clamp down the cable with the cable clamp. The cable must not be loose or pull on the u-lugs.
6. Reattach the electric box cover.

⚠ CAUTION

- While connecting the wires, please strictly follow the wiring diagram.
- The refrigerant circuit can become very hot. Keep the interconnection cable away from the copper tube.
- The holes on cover of the electronic control box must be threaded through with armored wires.

SPECIFIC WIRING METHODS

⚠ WARNING

Please refer to the wiring nameplate for the wiring method. Do not connect the power cord to the communication line, as this may damage the system.

Connection method A (recommend):

Refer to the wiring method of internal and external machine communication and wired controller as follows:

(A)

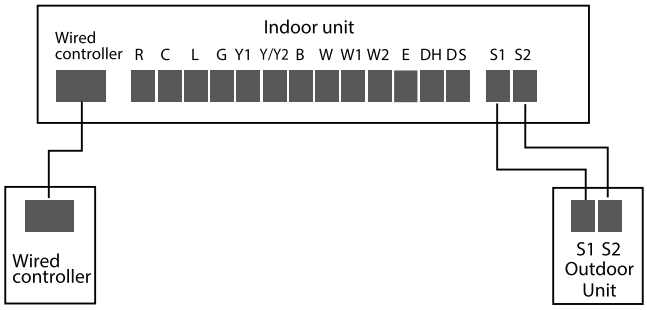

(B)

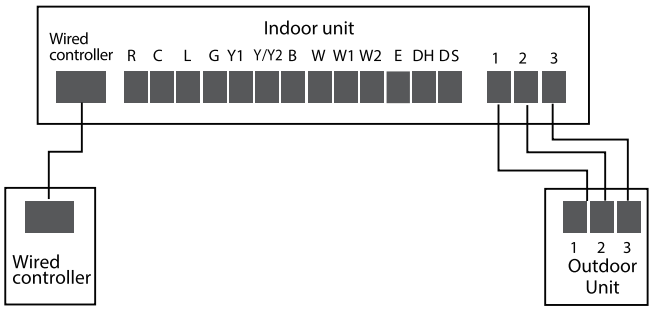

Connection method B:

To use a 24V thermostat, you need to refer to the following wiring:

(A)

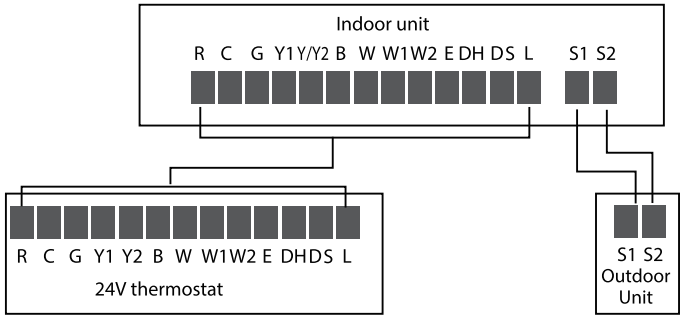

(B)

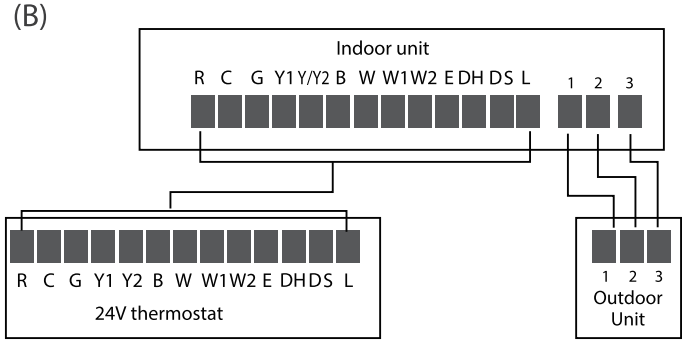

NOTICE

The wiring method of the thermostat and the internal machine refers to the wiring of the non-communication scheme.

Connection method C:

Cooling and Fixed-speed Type Only System Wiring Diagram:

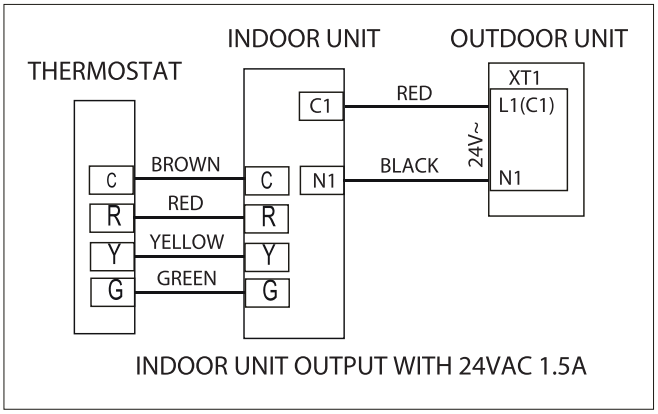

NOTICE

Suggestion: It is suggested that you use was a thermostat from Honeywell, series of non-programmabled thermostats, including the TH5220D.

Optional function wiring:

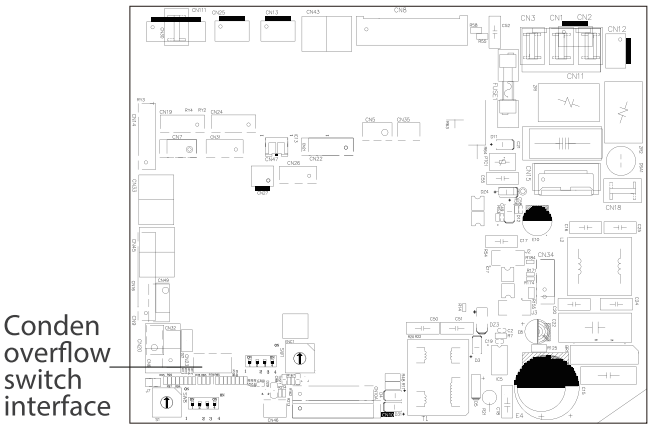

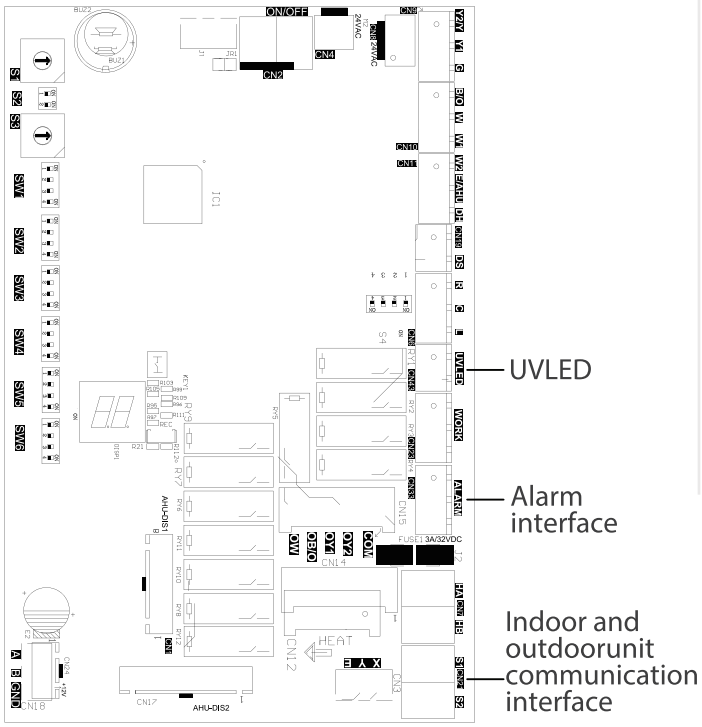

Condensate overflow switch:

The unit will accommodate a remote condensate overflow switch. To enable, remove jumper J7, and connect the installer provided condensate overflow device to CN23 per below. When an overflow condition is present, the device should open connection signaling the unit to turn off the system.

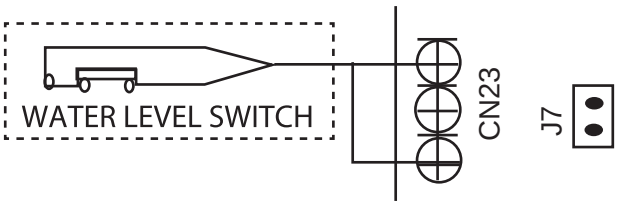

The fault warning:

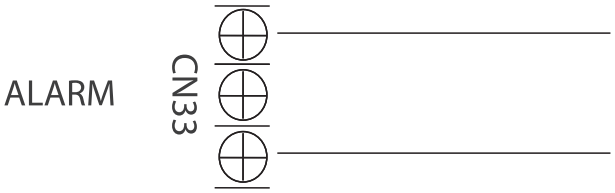

Alarm output:

An alarm output (CN33) can be utilized if actions are required when a fault is present. This is a passive outlet port, so you will need to input a voltage signal. The relay is normally-open for normal operation, and closed when a fault condition is active.

Humidifier control:

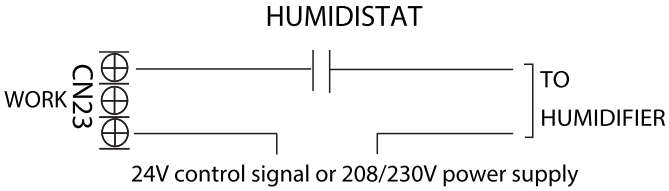

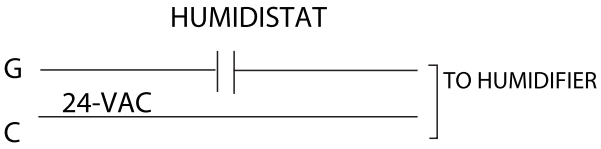

To connect a humidifier, utilize the passive signal “WORK” output (CN23) port as well as the G and C wires on the controller, and wire the humidistat and humidifier per above wiring diagram. When the fan is running, the CN23 relay will be closed, which will allow power to the humidifier when the humidistat is below humidity setpoint. If the thermostat or zone controller has an HUM interface, connect the humidifier directly to the HUM and C ports.

UV,fresh air or ion generator wiring

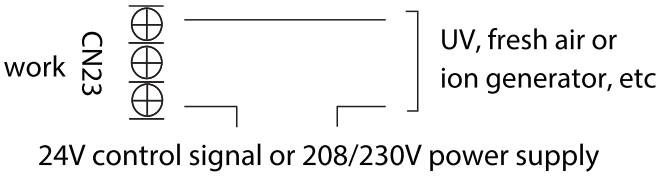

The WORK port is linked with the fan. When the fan is running, the relay is closed.

Control logic

Indoor unit connector

Connector	Purpose
R	24V Power Connection
C	Common
G	Fan Control
Y1	Low Demand
Y/Y2	High Demand
B	Heating Reversing Valve
W	Heating control
W1	Stage 1 Electric Heating
W2	Stage 2 Electric Heating
E/AUX	Emergency Heating
DH/BK	Dehumidification/Zoning control
DS	Reserved Signal
L	System Fault Signal

LED display

The control displays unit status as well as any active fault codes on the LED display. If the unit is functioning normally, the LED will display current temperature setpoint. When a fault code is active, the display will flash quickly the active fault code. Please refer to the fault code table located in the troubleshooting section of the manual for detailed fault code information.

KEY1 Instructions (For Wired Controller only)

- Press KEY1 to enter the forced automatic mode, press KEY1 again to enter the forced cooling mode (LED display FC), and press KEY1 again to shut down.
- Long press KEY1 under forced cooling mode (LED display FC) 5s to enter forced defrost mode.

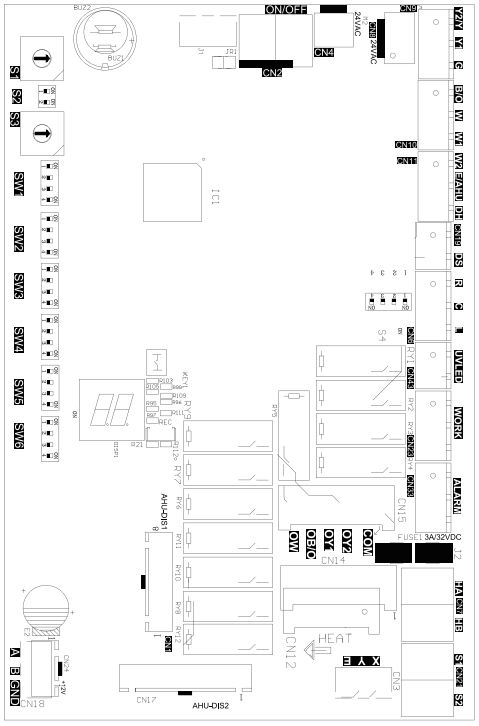

DIP switch definitions

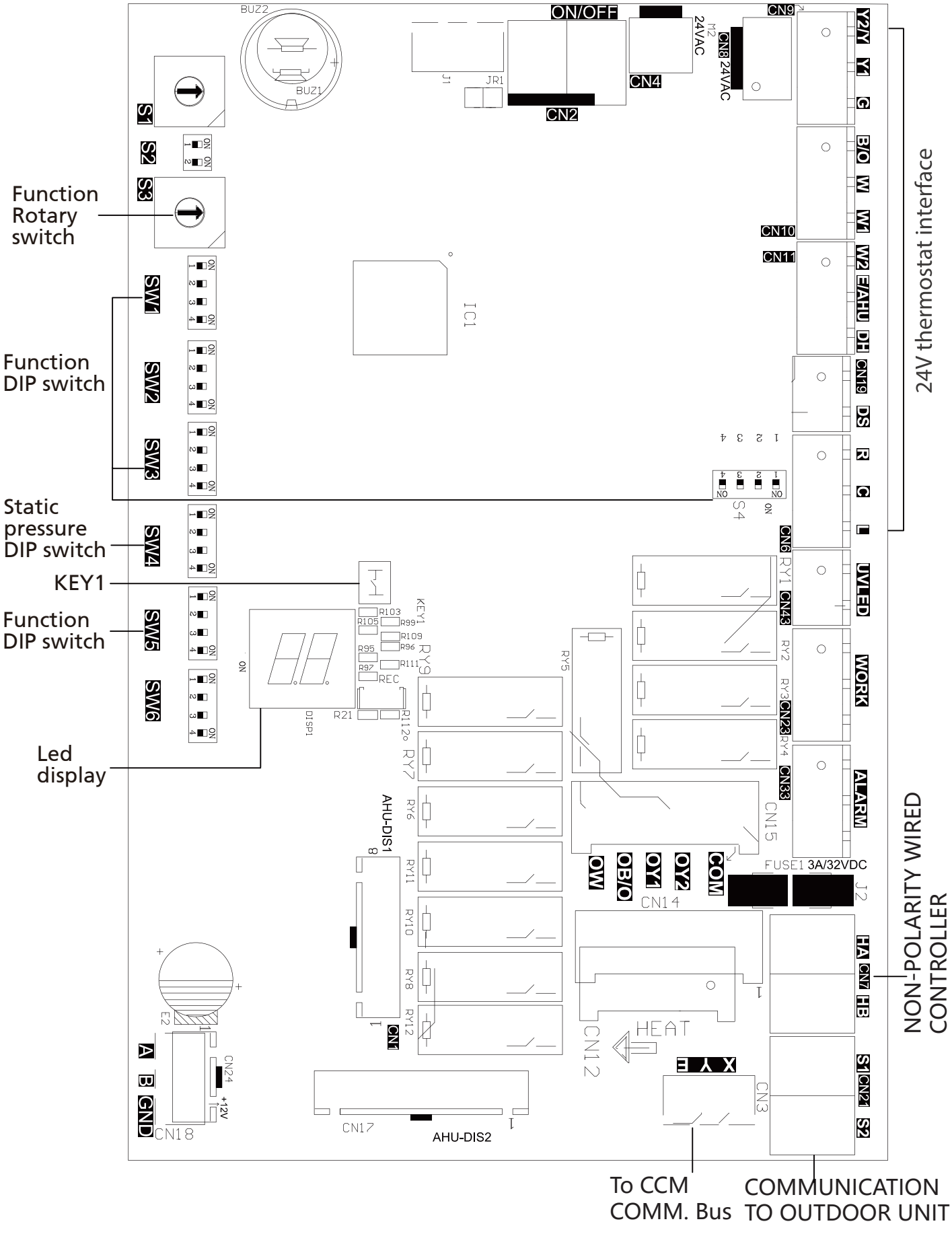

Function DIP switch settings:

The 24V thermostat mode needs to refer to the following settings:

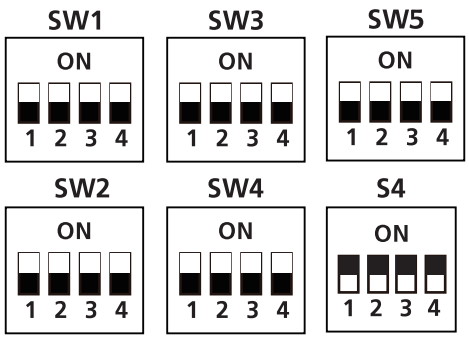

SW4-1 SW4-2 SW4-3	000 is the default 000/001/010/ 011/100/101/110/111, internal machines with different abilities, electric heating and PSC classification for use.

Function combination table of SW1-1 and SW1-4:

SW1	Control type	IDU and ODU Connection	Note
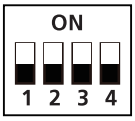	Wired controller / 24V thermostat	S1+S2	Auto Discovery
	Wired controller	S1+S2	Scenario 2
	24V Thermostat	S1+S2	Scenario 1
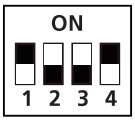	24V Thermostat	24V connection	This setting is not applicable to the units

Indoor unit dial code

No.	Dial Code	Control Scenario	Function	ON	OFF	Note
1	SW1-2	1,2,3	Anti-cold blow protection option	NO	[Default] YES	
2	SW1-3	1,2,3	Single cooling / heating and cooling options	Cooling	[Default] Cooling & Heating	
3	SW2-1	1	Compressor Running (demand working with heat pump+ Electric heat)	Compressor slower speed	[Default] Faster Compressor	Only affects compressor and W1
4	SW2-1	2	Temperature differential to activate first stage auxiliary heat (the GAP of T1 and Ts),Wire controller demand with heat pump+Electric heat working together	2°F(1 ℃)	[Default] 4°F(2°C)	
5	SW2-2	2	Electric heat on delay	YES	[Default]NO	
6	SW2-3	2	Electric auxiliary heating delay to start time	30 minutes	[Default] 15 minutes	Based on SW2-2 is ON
7	SW2-4	1	Compressor	The operation of heat pump is limited by the outdoor temperature, and the operation of auxiliary heat is not limited. The system makes judgments according to the following rules: 1) The compressor can be operated when the outdoor temperature is ⩾ S3 DIP switch temperature +2 °C. 2) The compressor cannot be operated when the outdoor temperature is lower than the S3 DIP switch temperature.	[Default]The operation of heat pump is limited by the outdoor temperature, and the operation of auxiliary heat is not limited. The system makes judgments based on the following rules: 1) The compressor cannot be operated when the outdoor temperature is lower than the S3 DIP switch. 2) The compressor can be operated when the outdoor temperature is ⩾S3 DIP switch temperature +2 °C.	SW2-4 and S3 need to working together
8	SW2-4	2	Compressor/Auxiliary heat outdoor ambient lockout	The operation of heat pump is limited by the outdoor temperature, and the operation of auxiliary heat is not limited. The system makes judgments according to the following rules: 1) The compressor can be operated when the outdoor temperature is ⩾ S3 DIP switch temperature +2 °C. 2) The compressor cannot be operated when the outdoor temperature is lower than the S3 DIP switch temperature.	[Default]Only one heat pump or auxiliary heat can be operated .The system makes judgments according to the following rules: 1) When the outdoor temperature is lower than the S3 DIP switch temperature, the compressor is not allowed to operated, but auxiliary heat is allowed to operated ; 2) When the outdoor temperature is ⩾S3 DIP switch temperature +2(°C), the compressor can be operated, but auxiliary heat cannot be operated.	
9	Rotary Switch S3	1,2	Set outdoor temperature Limitation (for auxiliary heating or compressor)	Table A		
10	SW3-1	1	Maximum continuous runtime allowed before system automatically stages up capacity to satisfy set point. This adds 1 to 5°F to the user set point in the calculated control point to increase capacity and satisfy user set point	30 minutes	[Default] 90 minutes	
11	SW3-2	1	Cooling and heating Y/Y2 temperature differential adjustment.	Compressor slower speed	[Default] Faster Compressor	Only affects compressor
12	SW3-3	1	Compressor Running (demand working with heat pump+ Electric heat)	Compressor slower speed	[Default] Faster Compressor	Only affects compressor and W2
13	SW3-3	2	Temperature differential to activate second stage auxiliary heating (the GAP of T1 and Ts) Wire controller demand with heat pump+Electric heat working together	4°F(2°C)	[Default] 6 °F(3°C)	
14	SW3-4	1,3	Fan speed of cooling mode when 24V Thermostat is applied for	Turbo	High	
15	SW4-1 SW4-2 SW4-3	1,2,3	Electric heat nominal CFM adjustment	Available settings are 000/001/010/011. Each digit corresponds an switch position. For example [SW4-1 OFF, SW4-2 ON, SW4 -3 OFF] = 010		
16	SW4-4	2	Temperature differential to activate third stage auxiliary heating (the GAP of T1 and Ts) Wire controller demand with heat pump+ Electric heat working together	6°F(3°C)	[Default]8°F(4°C)	Only valid for product which has three stage auxiliary heating.
17	S4-4	1,3	Default ON	[Default] For single stage supplemental and W2 are connected	For dual stage supplemental heat, W1 and W2 are controlled independently.	

18	S4-2	1,3	DH function selection	[Default] Dehumidification control not available	Dehumidification feature is enabled through thermostat	
19	SW5-3	1,2,3	L or Alarm relay selection	L output 24V or alarm relay close only when refrigerant sensor fault or R454B refrigerant leakage be detected	[default] L output 24V or alarm relay close when any fault be detected	
20	SW5-4	1,2,3	R output selection	R stop output 24V when refrigerant sensor fault or R454B refrigerant leakage be detected	[default] R keep output 24V even when refrigerant sensor fault or R454B refrigerant leakage be detected	

Control Scenario	24V Tstat, S1+S2	1
	Wired Controller S1+S2	2
	Full 24V	3

Note: Control scenario 3 is not applicable for this unit.

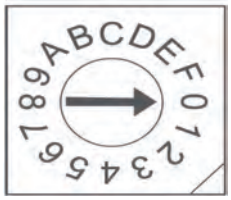

Address DIP switch:

Address dialing S1+SW8: When the user uses the centralized controller, the address dialing is required.
Network address: The address silkscreen is NET address, which is composed of a 16-bit address rotary code S1 plus a two-digit DIP switch SW8 [Set during engineering installation, no network function does not need to be set]
When SW8 is 00 (the dialing code is not connected), the network address value is the value of S1;
When SW8 is 10 (corresponding to the switch of the hardware connected to the 10K resistor), the network address value is S1 plus 16;
Determined by dial code SW8 1-10K 2-5.1K
When SW8 is 01 (corresponding to the dial code of the 5.1K resistor connected to the hardware is turned on), the network address value is the value of S1 plus 32;
When SW8 is 11 (all dialing codes are on), the network address value is the value of S1 plus 48.

Table A

S3	S3 (°F)	S3 (°C)
0	OFF	OFF
1	-22	-30
2	-18	-28
3	-15	-26
4	-11	-24
5	-8	-22
6	-4	-20
7	3	-16
8	10	-12
9	18	-8
A	25	-4
B	32	0
C	36	2
D	39	4
E	43	6
F	46	8

Determined by dial code SW8 1-10K 2-5.1K

Dial code selection	Website address
	S1 + 48
	S1 + 32
	S1 + 16
	S1

Air volume table

Capacity	External Static Pressure Range	Fan speed	Electric auxiliary heat module	24V thermostat		Wired controller		Airflow volume (CFM)
				DIP Switch	24V terminal engaged	DIP Switch	Mode	
18K（1.5 Ton）	0 - 0.80 in.wc.	Cooling Turbo	—	SW3-4=ON	Y2/Y	—	Cool	618
		Cooling High	—	SW3-4=OFF	Y2/Y	—	Cool	576
		Cooling Medium	—	—	Y1	—	Cool	529
		Cooling Low	—	—	—	—	Cool	488
		Heat Pump Turbo	—	—	—	—	Heat	565
		Heat Pump High	—	—	B+Y2/Y, W	—	Heat	541
		Heat Pump Medium	—	—	Y1	—	Heat	435
		Heat Pump Low	—	—	—	—	Heat	400
		Electric auxiliary heat module 0(Default)	10kW	SW4-1=OFF SW4-2=OFF SW4-3=OFF	W1, W2, AUX	SW4-1=OFF SW4-2=OFF SW4-3=OFF	Heat + AUX, AUX	653
		Electric auxiliary heat module 1	10kW, 8kW	SW4-1=OFF SW4-2=OFF SW4-3=ON	W1, W2, AUX	SW4-1=OFF SW4-2=OFF SW4-3=ON	Heat + AUX, AUX	624
		Electric auxiliary heat module 2	8kW	SW4-1=OFF SW4-2=ON SW4-3=OFF	W1, W2, AUX	SW4-1=OFF SW4-2=ON SW4-3=OFF	Heat + AUX, AUX	594
		Electric auxiliary heat module 3	5kW, 3kW	SW4-1=OFF SW4-2=ON SW4-3=ON	W1, W2, AUX	SW4-1=OFF SW4-2=ON SW4-3=ON	Heat + AUX, AUX	565
24K（2 Ton）	0 - 0.80 in.wc.	Cooling Turbo	—	SW3-4=ON	Y2/Y	—	Cool	824
		Cooling High	—	SW3-4=OFF	Y2/Y	—	Cool	759
		Cooling Medium	—	—	Y1	—	Cool	694
		Cooling Low	—	—	—	—	Cool	629
		Heat Pump Turbo	—	—	—	—	Heat	788
		Heat Pump High	—	—	B+Y2/Y, W	—	Heat	753
		Heat Pump Medium	—	—	Y1	—	Heat	641
		Heat Pump Low	—	—	—	—	Heat	524
		Electric auxiliary heat module 0(Default)	15kW	SW4-1=OFF SW4-2=OFF SW4-3=OFF	W1, W2, AUX	SW4-1=OFF SW4-2=OFF SW4-3=OFF	Heat + AUX, AUX	871
		Electric auxiliary heat module 1	15kW, 10kW	SW4-1=OFF SW4-2=OFF SW4-3=ON	W1, W2, AUX	SW4-1=OFF SW4-2=OFF SW4-3=ON	Heat + AUX, AUX	841
		Electric auxiliary heat module 2	10kW, 8kW	SW4-1=OFF SW4-2=ON SW4-3=OFF	W1, W2, AUX	SW4-1=OFF SW4-2=ON SW4-3=OFF	Heat + AUX, AUX	818
		Electric auxiliary heat module 3	5kW	SW4-1=OFF SW4-2=ON SW4-3=ON	W1, W2, AUX	SW4-1=OFF SW4-2=ON SW4-3=ON	Heat + AUX, AUX	788
30K（2.5 Ton）	0 - 0.80 in.wc.	Cooling Turbo	—	SW3-4=ON	Y2/Y	—	Cool	988
		Cooling High	—	SW3-4=OFF	Y2/Y	—	Cool	894
		Cooling Medium	—	—	Y1	—	Cool	806
		Cooling Low	—	—	—	—	Cool	712
		Heat Pump Turbo	—	—	—	—	Heat	918
		Heat Pump High	—	—	B+Y2/Y, W	—	Heat	876
		Heat Pump Medium	—	—	Y1	—	Heat	665
		Heat Pump Low	—	—	—	—	Heat	453
		Electric auxiliary heat module 0(Default)	15kW	SW4-1=OFF SW4-2=OFF SW4-3=OFF	W1, W2, AUX	SW4-1=OFF SW4-2=OFF SW4-3=OFF	Heat + AUX, AUX	1088
		Electric auxiliary heat module 1	15kW, 10kW	SW4-1=OFF SW4-2=OFF SW4-3=ON	W1, W2, AUX	SW4-1=OFF SW4-2=OFF SW4-3=ON	Heat + AUX, AUX	1029
		Electric auxiliary heat module 2	10kW, 8kW	SW4-1=OFF SW4-2=ON SW4-3=OFF	W1, W2, AUX	SW4-1=OFF SW4-2=ON SW4-3=OFF	Heat + AUX, AUX	976
		Electric auxiliary heat module 3	5kW	SW4-1=OFF SW4-2=ON SW4-3=ON	W1, W2, AUX	SW4-1=OFF SW4-2=ON SW4-3=ON	Heat + AUX, AUX	918

Air volume table

Capacity	External Static Pressure Range	Fan Speed	Electric auxiliary heat module	24V thermostat		Wired controller		Airflow volume (CFM)
				DIP Switch	24V terminal engaged	DIP Switch	Mode	
36K (3 Ton)	0 - 0.80 in.wc.	Cooling Turbo	—	SW3-4=ON	Y2/Y	—	Cool	1188
		Cooling High	—	SW3-4=OFF	Y2/Y	—	Cool	1082
		Cooling Medium	—	—	Y1	—	Cool	971
		Cooling Low	—	—	—	—	Cool	865
		Heat Pump Turbo	—	—	—	—	Heat	1112
		Heat Pump High	—	—	B+Y2/Y, W	—	Heat	1059
		Heat Pump Medium	—	—	Y1	—	Heat	794
		Heat Pump Low	—	—	—	—	Heat	582
		Electric auxiliary heat module 0(Default)	20kW	SW4-1=OFF SW4-2=OFF SW4-3=OFF	W1, W2, AUX	SW4-1=OFF SW4-2=OFF SW4-3=OFF	Heat + AUX, AUX	1306
		Electric auxiliary heat module 1	15kW	SW4-1=OFF SW4-2=OFF SW4-3=ON	W1, W2, AUX	SW4-1=OFF SW4-2=OFF SW4-3=ON	Heat + AUX, AUX	1241
		Electric auxiliary heat module 2	10kW, 8kW	SW4-1=OFF SW4-2=ON SW4-3=OFF	W1, W2, AUX	SW4-1=OFF SW4-2=ON SW4-3=OFF	Heat + AUX, AUX	1176
		Electric auxiliary heat module 3	5kW, 8kW	SW4-1=OFF SW4-2=ON SW4-3=ON	W1, W2, AUX	SW4-1=OFF SW4-2=ON SW4-3=ON	Heat + AUX, AUX	1112
48K (4 Ton)	0 - 0.80 in.wc.	Cooling Turbo	—	SW3-4=ON	Y2/Y	—	Cool	1600
		Cooling High	—	SW3-4=OFF	Y2/Y	—	Cool	1471
		Cooling Medium	—	—	Y1	—	Cool	1282
		Cooling Low	—	—	—	—	Cool	1094
		Heat Pump Turbo	—	—	—	—	Heat	1471
		Heat Pump High	—	—	B+Y2/Y, W	—	Heat	1324
		Heat Pump Medium	—	—	Y1	—	Heat	1141
		Heat Pump Low	—	—	—	—	Heat	976
		Electric auxiliary heat module 0(Default)	20kW	SW4-1=OFF SW4-2=OFF SW4-3=OFF	W1, W2, AUX	SW4-1=OFF SW4-2=OFF SW4-3=OFF	Heat + AUX, AUX	1741
		Electric auxiliary heat module 1	15kW	SW4-1=OFF SW4-2=OFF SW4-3=ON	W1, W2, AUX	SW4-1=OFF SW4-2=OFF SW4-3=ON	Heat + AUX, AUX	1653
		Electric auxiliary heat module 2	10kW, 8kW	SW4-1=OFF SW4-2=ON SW4-3=OFF	W1, W2, AUX	SW4-1=OFF SW4-2=ON SW4-3=OFF	Heat + AUX, AUX	1559
		Electric auxiliary heat module 3	8kW	SW4-1=OFF SW4-2=ON SW4-3=ON	W1, W2, AUX	SW4-1=OFF SW4-2=ON SW4-3=ON	Heat + AUX, AUX	1471
60K (5 Ton)	0 - 0.80 in.wc.	Cooling Turbo	—	SW3-4=ON	Y2/Y	—	Cool	1806
		Cooling High	—	SW3-4=OFF	Y2/Y	—	Cool	1582
		Cooling Medium	—	—	Y1	—	Cool	1359
		Cooling Low	—	—	—	—	Cool	1135
		Heat Pump Turbo	—	—	—	—	Heat	1659
		Heat Pump High	—	—	B+Y2/Y, W	—	Heat	1582
		Heat Pump Medium	—	—	Y1	—	Heat	1247
		Heat Pump Low	—	—	—	—	Heat	976
		Electric auxiliary heat module 0(Default)	25kW	SW4-1=OFF SW4-2=OFF SW4-3=OFF	W1, W2, AUX	SW4-1=OFF SW4-2=OFF SW4-3=OFF	Heat + AUX, AUX	2171
		Electric auxiliary heat module 1	15kW, 20kW	SW4-1=OFF SW4-2=OFF SW4-3=ON	W1, W2, AUX	SW4-1=OFF SW4-2=OFF SW4-3=ON	Heat + AUX, AUX	2029
		Electric auxiliary heat module 2	10kW, 15kW	SW4-1=OFF SW4-2=ON SW4-3=OFF	W1, W2, AUX	SW4-1=OFF SW4-2=ON SW4-3=OFF	Heat + AUX, AUX	1894
		Electric auxiliary heat module 3	10kW	SW4-1=OFF SW4-2=ON SW4-3=ON	W1, W2, AUX	SW4-1=OFF SW4-2=ON SW4-3=ON	Heat + AUX, AUX	1753

NOTICE

The constant airflow volume motor is applied. So the airflow volume is constant at all ESP within stated range.

SPECIFICATIONS

Cooling and Heating power specifications (Current Loop)

(Regular Heat Series)

MODEL(Btu/h)			18K	24K	30K	36K
POWER (outdoor)		PHASE	1 Phase			
		FREQUENCY AND VOLT	208/230V,60Hz			
OUTDOOR UNIT		MCA	18A	24A	28A	33A
		MOP	20A	25A	30A	35A
LINES GAUGE	OUTDOOR UNIT POWER LINE	LINE QUANTITY	2+Ground			
		LINE DIAMETER(AWG)	12	12	12	10
	OUTDOOR-INDOOR SIGNAL LINE	LINE QUANTITY	——			
		LINE DIAMETER(AWG)	——			
	THERMOSTAT SIGNAL LINE	LINE QUANTITY	——			
		LINE DIAMETER(AWG)	18			
	INDOOR-OUTDOOR CONNECTION LINE	LINE QUANTITY	4			
		LINE DIAMETER(AWG)	14			

(Hyper Heat Series)

MODEL(Btu/h)			18K	24K	33K
POWER (outdoor)		PHASE	1 Phase		
		FREQUENCY AND VOLT	208/230V,60Hz		
OUTDOOR UNIT		MCA	19A	24.9A	34A
		MOP	20A	25.0A	35A
LINES GAUGE	OUTDOOR UNIT POWER LINE	LINE QUANTITY	2+Ground		
		LINE DIAMETER(AWG)	12	12	10
	OUTDOOR-INDOOR SIGNAL LINE	LINE QUANTITY	——		
		LINE DIAMETER(AWG)	——		
	THERMOSTAT SIGNAL LINE	LINE QUANTITY	——		
		LINE DIAMETER(AWG)	18		
	INDOOR-OUTDOOR CONNECTION LINE	LINE QUANTITY	4		
		LINE DIAMETER(AWG)	14		

SPECIFICATIONS

Cooling and Heating power specifications (RS485)

(Regular Heat Series)

MODEL(Btu/h)			36K	48K	60K
POWER (outdoor)		PHASE	1 Phase		
		FREQUENCY AND VOLT	208/230V,60Hz		
OUTDOOR UNIT		MCA	33A	39A	42A
		MOP	35A	40A	45A
LINES GAUGE	OUTDOOR UNIT POWER LINE	LINE QUANTITY	2+Ground		
		LINE DIAMETER(AWG)	12	10	10
	OUTDOOR-INDOOR SIGNAL LINE	LINE QUANTITY	2		
		LINE DIAMETER(AWG)	20		
	THERMOSTAT SIGNAL LINE	LINE QUANTITY	——		
		LINE DIAMETER(AWG)	18		
	INDOOR-OUTDOOR CONNECTION LINE	LINE QUANTITY	3		
		LINE DIAMETER(AWG)	14		

(Hyper Heat Series)

MODEL(Btu/h)			36K	48K	60K
POWER (outdoor)		PHASE	1 Phase		
		FREQUENCY AND VOLT	208/230V,60Hz		
OUTDOOR UNIT		MCA	38A	44A	44A
		MOP	40A	45A	45A
LINES GAUGE	OUTDOOR UNIT POWER LINE	LINE QUANTITY	2+Ground		
		LINE DIAMETER(AWG)	10	8	8
	OUTDOOR-INDOOR SIGNAL LINE	LINE QUANTITY	2		
		LINE DIAMETER(AWG)	20		
	THERMOSTAT SIGNAL LINE	LINE QUANTITY	——		
		LINE DIAMETER(AWG)	18		
	INDOOR-OUTDOOR CONNECTION LINE	LINE QUANTITY	3		
		LINE DIAMETER(AWG)	14		

AIR EVACUATION

NOTICE

When opening valve stems, turn the hexagonal wrench until it hits against the stopper. Do not try to force the valve to open further.

Preparations and precautions

Air and foreign matter in the refrigerant circuit can cause abnormal rises in pressure, which can damage the air conditioner, reduce its efficiency, and cause injury. Use a vacuum pump and manifold gauge to evacuate the refrigerant circuit, removing any non-condensable gas and moisture from the system. Evacuation should be performed upon initial installation and when unit is relocated.

BEFORE PERFORMING EVACUATION

- ☑ Check to make sure the connective pipes between the indoor and outdoor units are connected properly .
- ☑ Check to make sure all wiring is connected properly.

Evacuation Instructions

1. Connect the charge hose of the manifold gauge to service port on the outdoor unit's low-pressure valve.
2. Connect another charge hose from the manifold gauge to the vacuum pump.
3. Open the Low-Pressure side of the manifold gauge. Keep the High-Pressure side closed.
4. Turn on the vacuum pump to evacuate the system.
5. Run the vacuum for at least 15 minutes, or until the Compound Meter reads -750 Micron HG(-10^5Pa).

Outdoor unit

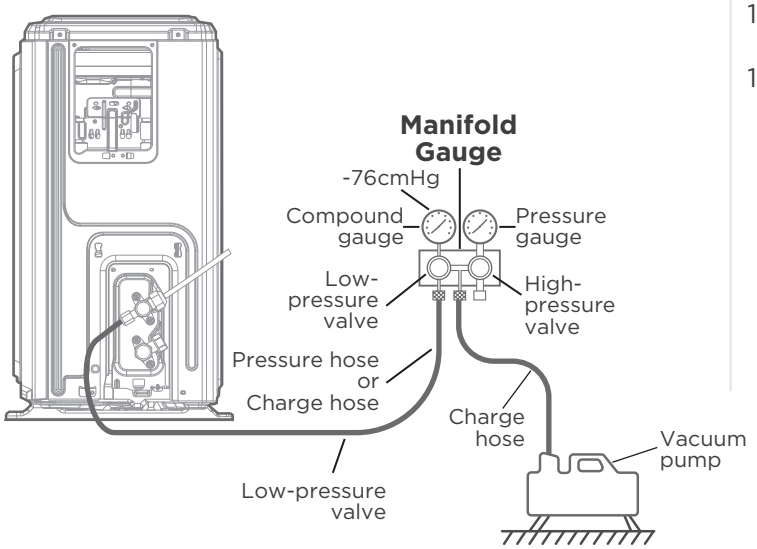

6. Close the Low-Pressure side of the manifold gauge, and turn off the vacuum pump.
7. Wait for 5 minutes, then check that there has been no change in system pressure.
8. If there is a change in system pressure, refer to Gas Leak Check section for information on how to check for leaks. If there is no change in system pressure, unscrew the cap from the packed valve (high-pressure valve).
9. Insert hexagonal wrench into the packed valve (high-pressure valve) and open the valve by turning the wrench in a 1/4 counterclockwise turn. Listen for gas to exit the system, then close the valve after 5 seconds.
10. Watch the Pressure Gauge for one minute to make sure that there is no change in pressure. The Pressure Gauge should read slightly higher than atmospheric pressure.
11. Remove the charge hose from the service port.

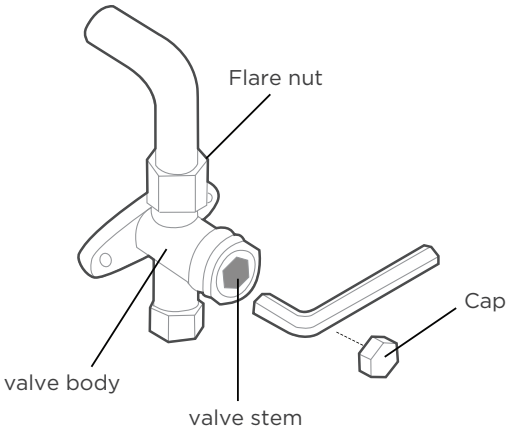

12. Using hexagonal wrench, fully open both the high-pressure and low-pressure valves.
13. Tighten valve caps on all three valves (service port, high-pressure, low-pressure) by hand. You may tighten it further using a torque wrench if needed.

NOTE ON ADDING REFRIGERANT

⚠ CAUTION

DO NOT mix refrigerant types.

Some systems require additional charging depending on pipe lengths. In North America, the standard pipe length is 25ft (7.5m). The refrigerant should be charged from the service port on the outdoor unit's low-pressure valve. The additional refrigerant to be charged can be calculated using the following formula:

	Liquid Side Diameter	
Refrigerant	Ø1/4in (Ø6.35mm)	Ø3/8in (Ø9.52mm)
R454B: **(orifice tube in the indoor unit):**	(Total pipe length - standard pipe length) ×30g(0.32oz)/m(ft)	(Total pipe length - standard pipe length) ×65g(0.7oz)/m(ft)

TEST RUN

⚠ CAUTION

Failure to perform the test run may result in unit damage, property damage, or personal injury.

Before test run

A test run must be performed after the entire system has been completely installed. Confirm the following points before performing the test:
a) Indoor and outdoor units are properly installed.
b) Piping and wiring are properly connected.
c) No obstacles near the inlet and outlet of the unit that might cause poor performance or product malfunction.
d) Refrigeration system does not leak.
e) Drainage system is unimpeded and draining to a safe location.
f) Insulation of piping and duct is properly installed.
g) Grounding wires are properly connected.
h) Length of the piping and additional refrigerant capacity have been recorded.
i) Power voltage is the correct voltage for the air conditioner

Test run instructions

1. Open both the liquid and gas service valves.
2. Turn on the main power switch and allow the unit to warm up.
3. Set the air conditioner to COOL mode.
4. For the Indoor Unit
   a. Double check to see if the room temperature is being registered correctly.
   b. Ensure the manual buttons on the indoor unit works properly.
   c. Check to see that the drainage system is unimpeded and draining smoothly.
   d. Ensure there is no vibration or abnormal noise during operation.
5. For the Outdoor Unit
   a. Check to see if the refrigeration system is leaking.
   b. Make sure there is no vibration or abnormal noise during operation.
   c. Ensure the wind, noise, and water generated by the unit do not disturb your neighbors or pose a safety hazard.
6. Drainage Test
   a. Ensure the drainpipe flows smoothly. New buildings should perform this test before finishing the ceiling.
   b. Turn on the main power switch and run the air conditioner in COOL mode.
   c. Check to see that the water is discharged. It may take up to one minute before the unit begins to drain depending on the drainpipe.
   d. Make sure that there are no leaks in any of the piping.
   e. Stop the air conditioner. Turn off the main power switch and reinstall the test cover.

NOTICE

If the unit malfunctions or does not operate according to your expectations, please refer to the Troubleshooting section of Service Manual before calling customer service.

The design and specifications are subject to change without prior notice for product improvement. Consult with the sales agency or manufacturer for details. Any updates to the manual will be uploaded to the service website, please check for the latest version.

24V SIGNAL CHART

		24V input terminal										
Mode	Priority	G	Y1	Y/Y2	B	W	W1	W2	E/AUX	DH	Fan speed	Display
OFF	/	0	0	0	0	0	0	0	0	*	OFF	00
FAN	7	1	0	0	*	0	0	0	0	*	Low	01
Cooling stage 1	6	*	1	0	0	0	0	0	0	1	Mid	02
Cooling stage 2		*	*	1	0	0	0	0	0	1	High	03
Dehumidification 1		*	1	0	0	0	0	0	0	0	Low	04
Dehumidification 2		*	*	1	0	0	0	0	0	0	Low	05
Heat pump stage 1	5	*	1	0	1	0	0	0	0	1	Mid	06
Heat pump stage 2		*	*	1	1	0	0	0	0	1	High	07
Heat pump stage 2		*	*	*	*	1	0	0	0	1	High	
Electric auxiliary heat module 1	3	*	0	0	*	0	1	0	0	*	Turbo	08
Electric auxiliary heat module 2		*	0	0	*	0	0	1	0	*	Turbo	
Electric auxiliary heat module 1 and 2		*	0	0	*	0	1	1	0	*	Turbo	09
Heat pump stage 1 + Electric auxiliary heat module 1	4	*	1	0	1	0	1	0	0	1	Turbo	10
Heat pump stage 1 + Electric auxiliary heat module 2		*	1	0	1	0	0	1	0	1	Turbo	
Heat pump stage 2 + Electric auxiliary heat module 1		*	*	1	1	0	1	0	0	1	Turbo	
Heat pump stage 2 + Electric auxiliary heat module 1		*	*	*	*	1	1	0	0	1	Turbo	
Heat pump stage 2 + Electric auxiliary heat module 2		*	*	1	1	0	0	1	0	1	Turbo	
Heat pump stage 2 + Electric auxiliary heat module 2		*	*	*	*	1	0	1	0	1	Turbo	
Heat pump stage 1 + Electric auxiliary heat module 1 and 2		*	1	0	1	0	1	1	0	1	Turbo	11
Heat pump stage 2 + Electric auxiliary heat module 1 and 2		*	*	1	1	0	1	1	0	1	Turbo	
Heat pump stage 2 + Electric auxiliary heat module 1 and 2		*	*	*	*	1	1	1	0	1	Turbo	
Emergency heat	1	*	*	*	*	*	*	*	1	*	Turbo	12
Heating zone control	2	*	1	0	1	0	*	*	0	0	Low	13
Heating zone control		*	*	1	1	0	*	*	0	0	Low	
Heating zone control		*	*	*	*	1	*	*	0	0	Low	

Note:
1: 24V signal
0: No 24V signal
*: 1 or 0.
The AHU will turn off if the 24V input cannot meet the table.

Matching With Multi Zone Outdoor Unit

When matching with multi zone outdoor unit, the indoor unit cannot be started due to the mode conflict in the following cases.

Mode Of AHU	Mode Of other IDU zones	Mode Conflict Unit
Fan	Heating/ Electric heat/ Emergency heat	AHU
Cooling		AHU
Dehumidification		AHU
Heating	Fan/Cooling/Dehumidification	Other IDU zones
Electric heat		Other IDU zones
Emergency heat		Other IDU zones

Note:

- When Heating reaches the temperature and shuts down with other IDU zones heating normally, the AHU fan will stop running, and the Fan-ON mode is invalid.
- The heat pump will start synchronously when Emergency heat or Electric heat is started.
- When two AHU units are connected by multi zone outdoor unit, the above rules are applicable while one of the AHU unit regarded as other IDU zones.

KLIMAIRE®

7999 NW 81 Place - Medley, FL 33195 USA

Tel: (305) 594 - 4972 Fax (305) 675-2212
www.klimaire.com sales@klimaire.com

The Klimaire logo is a registered trademark
of Klimaire Products, Inc. Copyright 2025

The design and specifications are subject to change without prior notice for product improvement. Consult with the sales agency or manufacturer for details. Any updates to the manual will be uploaded to the service website, please check for the latest version.

I7IC2501